WEBSTER COMBUSTION
A Selas Heat Technology Company

Webster Combustion Technology
619 Industrial Road, Winfield, KS 67156

Installation, Startup, Operation and Maintenance Manual

Model HDS and HDSX Burner

HDS 200A THROUGH HDS – 600C

HDSX 200A THROUGH HDSX 600C

200 to 600 BHP, Gas and Oil Firing

Manual Part No. 950043

www.webster-engineering.com

September, 2014

© 2014 All Rights Reserved

SAFETY PRECAUTIONS

Good safety practices must be used when working on burner equipment. The potential energy in the electrical supply, fuel and related equipment must be handled with extreme care to prevent equipment failures, injuries and potential death.

Throughout this manual, the following symbols are used to identify potential problems.

WARNING

This indicates a potential hazardous situation, which if not avoided, could result in personal injury or death.

CAUTION

This indicates a potentially hazardous situation, which if not avoided, could result in damage to the equipment.

The following general safety precautions apply to all equipment work.

WARNING

IF YOU SMELL GAS, OPEN WINDOW, EXTINGUISH ANY OPEN FLAMES, STAY AWAY FROM ELECTRICAL SWITCHES, EVACUATE THE BUILDING AND IMMEDIATELY CALL THE GAS COMPANY.

IN ACCORDANCE WITH OSHA STANDARDS, ALL EQUIPMENT, MACHINES AND PROCESSES SHALL BE LOCKED OUT PRIOR TO SERVICING.

IF THIS EQUIPMENT IS NOT INSTALLED, OPERATED AND MAINTAINED IN ACCORDANCE WITH THE MANUFACTURERS INSTRUCTIONS, THIS PRODUCT COULD EXPOSE YOU TO SUBSTANCES IN FUEL OR FROM FUEL COMBUSTION WHICH CAN CAUSE DEATH OR SERIOUS ILLNESS AND WHICH ARE KNOWN TO THE STATE OF CALIFORNIA TO CAUSE CANCER, BIRTH DEFECTS OR OTHER REPRODUCTIVE HARM.

IMPROPER SERVICING OF THIS EQUIPMENT MAY CREATE A POTENTIAL HAZARD TO EQUIPMENT AND OPERATORS.

SERVICING MUST BE DONE BY A FULLY TRAINED AND QUALIFIED PERSONNEL.

BEFORE DISCONNECTING OR OPENING UP A FUEL LINE AND BEFORE CLEANING OR REPLACING PARTS OF ANY KIND,

- **TURN OFF THE MAIN MANUAL FUEL SHUTOFF VALVES INCLUDING THE PILOT COCK, IF APPLICABLE. IF A MULTIPLE FUEL BURNER, SHUT OFF ALL FUELS.**
- **TURN OFF ALL ELECTRICAL DISCONNECTS TO THE BURNER AND ANY OTHER EQUIPMENT OR SYSTEMS ELECTRICALLY INTERLOCKED WITH THE BURNER.**

Service Organization Information:

Company Name _____

Address _____

_____

Phone Number _____

Date of Startup

_____

Lead Technician

_____

Table of Contents

A. General Page 4
1. Nameplate Information ..... Page 4
2. Ratings ..... Page 6
3. Product Offering ..... Page 6
4. Your Complete Manual ..... Page 6
5. Service and Parts ..... Page 7

B. Components Page 8
1. General ..... Page 10
2. Combustion Air ..... Page 10
3. Burner Drawer ..... Page 11
4. Gas Fuel Components ..... Page 12
5. Oil Fuel Components ..... Page 13
6. Flue Gas Recirculation (FGR)..... Page 15
7. Fuel-Air-Ratio Controls ..... Page 16
8. Electrical Controls ..... Page 17

C. Installation Page 19
1. General Considerations ..... Page 19
2. Refractory Frontplate ..... Page 20
3. Burner Mounting ..... Page 20
4. Gas Piping ..... Page 21
5. General Oil Piping ..... Page 22
6. Pressure Atomized Oil System..... Page 23
7. Air Atomized #2 Oil ..... Page 24
8. Gas Pilot ..... Page 24
9. FGR Duct System ..... Page 25
10. Draft and Stacks ..... Page 27
11. Electrical System ..... Page 28

D. Fuel and Control Systems Page 29
1. Gas Systems ..... Page 29
2. Gas Pilot ..... Page 30
3. Pressure Atomized Oil System..... Page 31
4. Air Atomized #2 Oil ..... Page 31
5. Fuel-Air-Ratio Controls ..... Page 32
6. Electrical Controls ..... Page 32
7. Operating and Modulating Controls ..... Page 33
8. Flame Safeguards ..... Page 33

E. Preliminary Adjustments Page 34
1. Visual Inspection ..... Page 34
2. Burner Drawer Checkout ..... Page 34
3. Motor Rotation ..... Page 35
4. Fuel, FGR and Air Control ..... Page 35
5. Fuel Cam Adjustments ..... Page 36
6. Air Damper Adjustments ..... Page 37
7. Pilot and Scanner Adjustments ..... Page 37
8. Gas System Adjustments ..... Page 38
9. Oil System Adjustments ..... Page 38
10. Air Proving Switch ..... Page 38
11. Operating and Modulating Controls ..... Page 39

F. Startup and Operating Adjustments Page 40
1. Pre-Start Check List ..... Page 40
2. Linkage Adjustments ..... Page 40
3. Fuel Cam Adjustments ..... Page 41
4. FGR Adjustments ..... Page 41
5. Burner Drawer Adjustments ..... Page 42
6. Single Fuel Setups ..... Page 43
7. Combination Gas and Pressure Atomized Oil ..... Page 43
8. Combination Gas and Air Atomized #2 Oil ..... Page 43
9. Gas Setup ..... Page 44
10. Pressure Atomized Oil Setup ..... Page 45
11. Air Atomized #2 Oil Setup ..... Page 46
12. Operating Control Adjustments ..... Page 47
13. Limit Tests ..... Page 48
14. Pilot Test..... Page 48
15. Burner Shutdown ..... Page 48
16. Restarting After Extended Shutdown ..... Page 48

G. Maintenance Page 49
1. General ..... Page 49
2. Physical Inspection ..... Page 49
3. Fuel-Air-Ratio ..... Page 49
4. Gas Fuel Systems ..... Page 49
5. Oil Fuel Systems ..... Page 49
6. FGR Systems ..... Page 50
7. Combustion Air Fan ..... Page 50
8. Inspection and Maintenance Schedule .... Page 51
9. Combustion Chart ..... Page 52

H. Trouble Shooting ..... Page 54

A. GENERAL

1. Nameplate Information
2. Ratings
3. Product Offering
4. Your Complete Manual
5. Service and Parts

This manual covers the Models HDS and HDSX burners offered by Webster Engineering & Manufacturing Co., LLC. These burners are intended for commercial and industrial applications for Scotch Marine Firetube boilers. They can fire gas, oil or combinations of gas and oil.

READ AND SAVE THESE INSTRUCTIONS FOR REFERENCE

WARNING
DO NOT ATTEMPT TO START, ADJUST OR MAINTAIN THIS BURNER WITHOUT PROPER TRAINING OR EXPERIENCE. FAILURE TO USE KNOWLEDGEABLE TECHNICIANS CAN RESULT IN EQUIPMENT DAMAGE, PERSONAL INJURY OR DEATH.

The startup and maintenance of the HDS and HDSX burner requires the skills of an experienced and properly trained burner technician. Inexperienced individuals should not attempt to start or adjust this burner.

THE INSTALLATION OF THE EQUIPMENT SHALL BE IN ACCORDANCE WITH THE REGULATION OF AUTHORITIES HAVING JURISDICTION, INCLUDING THE NATIONAL ELECTRICAL CODE, CSA STANDARDS 139 AND 140, THE CANADIAN NATIONAL ELECTRIC CODE, PART I AND ALL LOCAL CODES.

Every attempt has been made to accurately reflect the burner construction, however, product upgrades and special order requirements may result in differences between the content of this manual and the actual equipment. These special components will be described in the information provided with the burner and should be used as the controlling document.

NOTE: This manual must be readily available to all operators and maintained in legible condition.

1. Nameplate Information

Each burner has a nameplate with important job details, similar to the nameplates shown in Figure A-1A and A-1B. The “X” in the HDSX refers to a low NOx burner, where FGR is used to reduce the NOx in the combustion gases. If the burner is not a low NOx burner, there is no X in the model.

Figure A-1A Nameplate - US Applications

MODEL NUMBER	SERIAL NUMBER
HDSXC-400B-5V 150 RM7800L-M.25 VGD	U73586A-02
JOB LOCATION	**DATE MFG**
Georgia	30 - Nov - 04

	GAS INPUT RATING		OIL INPUT RATING	
	MBTU/HR	IN.WC	GPH	PSI
MAXIMUM	16738	8.4	119.6	28/31
MINIMUM	2790	0.15	23	12/21
FUEL	NATURAL GAS		#2 OIL / AIR	

	VOLTS	AMPS	HERTZ	PHASE	HP
CONTROL CIRCUIT	115	5	60	1	
BURNER MOTOR	460	20.1	60	3	15
OIL PUMP MOTOR	460	2.9	60	3	1.5

Figure A-1B Nameplate - Canadian Applications

MODEL NUMBER	SERIAL NUMBER
HDSXC-400B-5V 150 RM7800L-M.25 VGD	CUL73586A-02
JOB LOCATION	**DATE MFG**
Canada	30 - Nov - 04

	GAS INPUT RATING		OIL INPUT RATING	
	MBTU/HR	IN.WC	GPH	PSI
MAXIMUM	16738	8.4	120	150
MINIMUM	2790	0.15	40	65
FUEL	NATURAL GAS		#2 OIL	
MAX OVERFIRE DRAFT			3.8”	
OIL NOZZLES (QTY) GPH @ 100 PSI			(2) 24, (1) 22	
REQ’D GAS INLET PRESS	36”	GAS BTU/CUFT	1000	
REQ’D OIL PUMP PRESS	300 PSI			

	VOLTS	AMPS	HERTZ	PHASE	HP
CONTROL CIRCUIT	115	5	60	1	
BURNER MOTOR	460	20.1	60	3	15
OIL PUMP MOTOR	460	2.9	60	3	1.5

The serial number represents the unique number for that burner and is a critical number that will be needed for any communications with Webster Engineering.

The input rates define the maximum and minimum inputs for that burner, given in MBH for gas and GPH for oil. Air atomized burners (Figure A-1A) show both the oil pressure and air pressure. Pressure atomized burners (Figure A-1B) only list the oil pressure. For gas firing, the gas manifold pressure is given in “in wc” which is inches of water column.

The electrical ratings of the burner are given, with the voltage, current load, frequency and phase (this will either be single or 3-phase). For motors, the motor HP is listed.

MODEL HDS(X) BURNER MODEL CONFIGURATION
FIGURE A-2

HDSC - 250 A -5-SL-75-RM7800L- M .25 VGD-MA-UL/CSD-1

BURNER SERIES	
HDS	No FGR
HDSX	With FGR

FUELS	
G	Gas
O	Oil
C	Gas / Oil

BOILER HP	
200	200 HP
250	250 HP
300	300 HP
350	350 HP
400	400 HP
450	450 HP
500	500 HP
600	600 HP

HEAD SIZE	
A	12 inches
B	16 inches

HOUSING SIZE	
5	5
7	7

HOUSING ROTATION	
SL	Slant left
SR	Slant right
V	Vertical (std)

MOTOR HORSEPOWER				
50	5 HP		200	20 HP
75	7.5 HP		250	25 HP
100	10 HP		300	30 HP
150	15 HP			

CODES AND LISTINGS
UL
ULc
CSD-1
FM
IRI
NFPA-85

PRESSURE, AIR or STEAM ATOMIZING	
MR	Pressure atomizing
MA	Air atomizing

GAS TRAIN VENDOR	
VGD	Seimens
VGG	Seimens
M	Maxon
Blank	All Others (ASCO) - (std)

GAS TRAIN SIZE	
.15	1 1/2 inches
.20	2 inches
.25	2 1/2 inches
.30	3 inches
.40	4 inches

MODULATION	
M	Full modulation

FLAME SAFEGUARD VENDOR DESIGNATION	
RM7800L	Honeywell
M Mark	AutoFlame - mini mark
E110/EP170	Fireye
Nexus - N	Fireye
LMV51-S	Siemens
LMV52-S	Siemens

The above represents the common model designations.
Contact the factory for other options and special applications.

2. Ratings

The ratings for each specific burner are given on the nameplate (Figure A-1A & A-1B). The general burner ratings are given in Figure A-3. The maximun and minimum inputs are given, based on the type of fuel. Other conditions, like the supply gas pressure or the combination of fuels, emission requirements and control systems may limit the turndown.

Turndown is defined as the ratio of the maximum input to the minimum input. For example, a burner with a maximum input of 120 GPH and a minimum input of 12 GPH has a 10:1 turndown. Burners equipped for high turndown (greater than 6:1) can have different equipment to improve fuel, air and FGR flow control.

3. Product Offering

The HDS burner is intended for Scotch Marine Firetube boiler applications. The round furnace is required to contain the flame and make the best use of the high swirl action. The burner can fire natural gas, #2 oil or combination of natural gas and #2 oil.

DO NOT USE GASOLINE, CRANKCASE OIL OR ANY OIL CONTAINING GASOLINE.

This burner is also available as a low emission burner, and will have model designation HDSX. Several low NOx rates are available for all gas and light oil burners, with the standard offering of 60 ppm, 30 ppm and 20 ppm when firing natural gas.

Figure A-2 lists the common variations and options available on this product.

The minimum furnace conditions are given in Figure A-4. All three furnace criteria must be met, including the minimum inside diameter (not including the corrugations), the minimum furnace length (this includes the length of the turnaround chamber) and the maximum heat release (which may require a larger diameter or length). These are general minimum conditions, and certain application testing can allow for special furnace sizes and operation.

4. Your Complete Manual

In addition to this manual, there are several other documents that should be considered as part of the complete manual for the burner. All of these documents are needed to support the installation and startup of the unit. These additional items include:

a. The wiring diagram, which shows the limits and interconnection of the burner and vessel controls.

Figure A-3
General Ratings

Model Ratings for USA and International									Model Ratings for Canadian Market					
BHP	Gas Input MBH		Air Atom. #2 Oil Input (GPH)		Press. Atom. #2 Oil Input (GPH)				Gas Input MBH		Air Atom. Oil Input (GPH)		Press. Atom. Oil Input (GPH)	
	Min	Max	Min	Max	Min	Max			Min	Max	Min	Max	Min	Max
Standard Gas - Oil - Combination Burner (No Low NOx)														
200	697	8400	6.0	60	17.0	60			697	8400	6.0	60	20	60
250	872	10500	7.5	75	21.4	75			872	10500	7.5	75	25	75
300	1046	12600	9.0	90	25.0	90			1046	12600	9.0	90	30	90
350	1220	14700	10.5	105	30.0	105			1220	14700	10.5	105	35	105
400	1395	16800	12.0	120	NA	NA			1395	16800	12.0	120	NA	NA
450	1569	18900	13.5	135	NA	N A			1569	18900	13.5	135	NA	NA
500	1743	21000	15.0	150	NA	NA			1743	21000	15.0	150	NA	NA
600	2092	25200	18.0	180	NA	NA			2092	25200	18.0	180	NA	NA
Low NOx Burner with Induced FGR - 30 ppm														
200	697	8400	6.0	60	17.0	60			697	8400	6.0	60	17.0	60
250	872	10500	7.5	75	21.4	75			872	10500	7.5	75	21.4	75
300	1046	12600	9.0	90	25.0	90			1046	12600	9.0	90	25.0	90
350	1220	14700	10.5	105	30.0	105			1220	14700	10.5	105	30.0	105
400	1395	16800	12.0	120	NA	NA			1395	16800	12.0	120	NA	NA
450	1569	18900	13.5	135	NA	NA			1569	18900	13.5	135	NA	NA
500	1743	21000	15.0	150	NA	NA			1743	21000	15.0	150	NA	NA
600	2092	25200	18.0	180	NA	NA			2092	25200	18.0	180	NA	NA

b. The gas and oil piping schematics, which show the components and their relative positions in the piping train.
c. The unit material list which provides an overview of the burner requirements and a complete bill of material, including the part numbers and description for each item.
d. The flame safeguard manual provides the operating sequence for the burner management system. This will be a critical document for troubleshooting any future problems.
e. Catalog cuts of the major components. These provide details on the installation, adjustment and maintenance of the components used on the burner.

5. Service, Parts and other Information

Service and parts are available from your local Webster Representative. For a list of Webster Representatives, please visit the Webster web site at:

www.webster-engineering.com or call 620-221-7464.

Figure A-4 Furnace Conditions

BHP	Input Kbtu/hr	Min. Furn. Length	No FGR		30 & 60 ppm NOx		20 ppm NOx	
			Min Furn. Dia.	Max Heat Rel.	Min Furn. Dia.	Max Heat Rel.	Min Furn. Dia.	Max Heat Rel.
200	8369	116	26	185000	26	175000	28	165000
250	10461	128	27	185000	28	175000	29	165000
300	12553	138	29	185000	30	175000	31	165000
350	14645	146	31	185000	32	175000	35	165000
400	16738	154	33	185000	35	175000	36	165000
450	18830	160	34	185000	36	175000	39	165000
500	20922	166	35	185000	37	175000	42	165000
600	25106	177	38	185000	39	175000	44	165000

B. COMPONENT DESCRIPTIONS

1. General
2. Combustion Air
3. Burner Drawer
4. Gas Fuel Components
5. Oil Fuel Components
6. Flue Gas Recirculation (FGR)
7. Fuel-Air-Ratio Controls
8. Electrical Controls

This section describes the components of the HDS burner line and provides some details on their application and operation. Other sections of this manual provide a more detailed review of how the components work as a system and explain the overall operation of the burner.

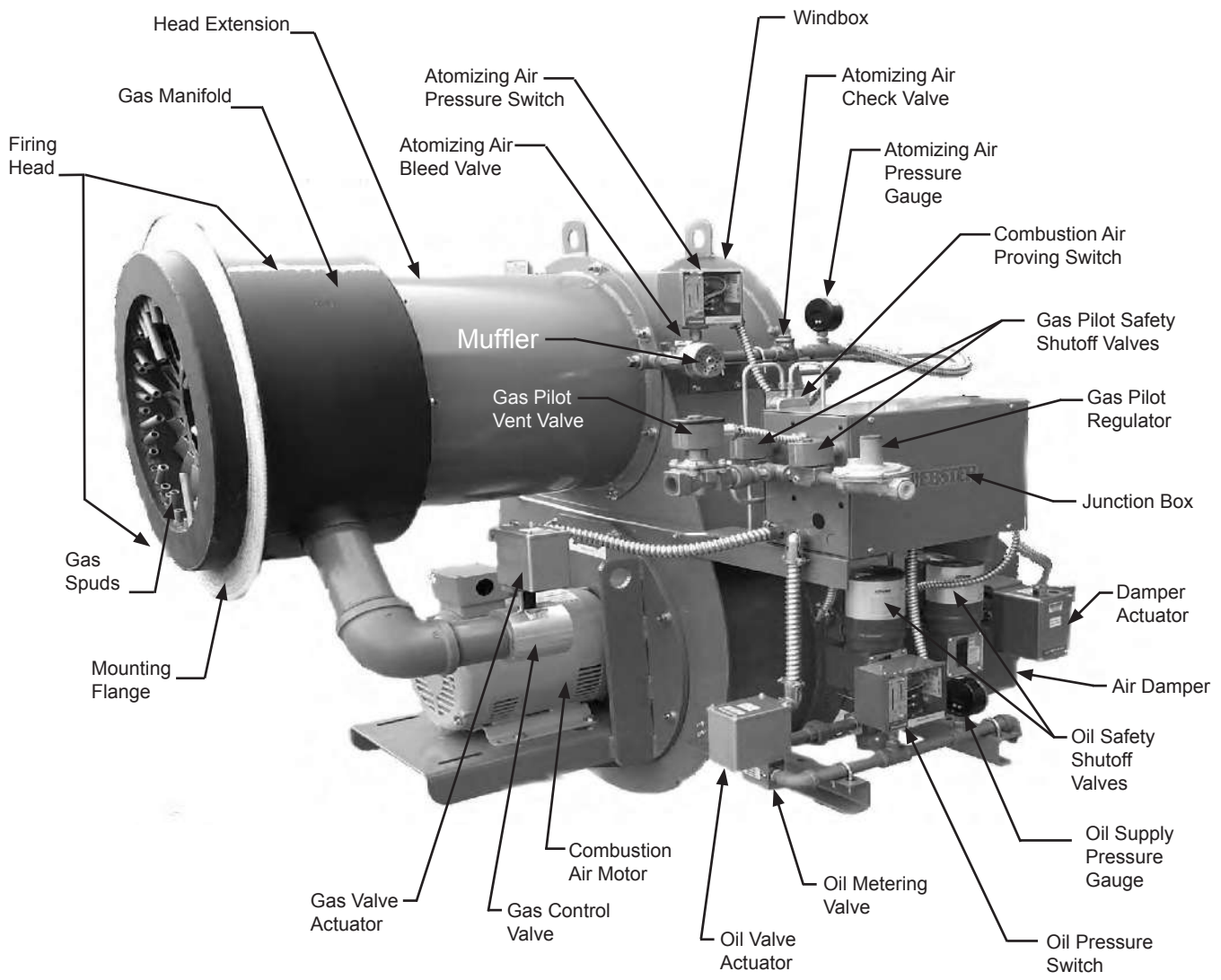

Figure B-1
HDSX General Arrangement, Left Side
(Shown With Optional Linkageless Control)

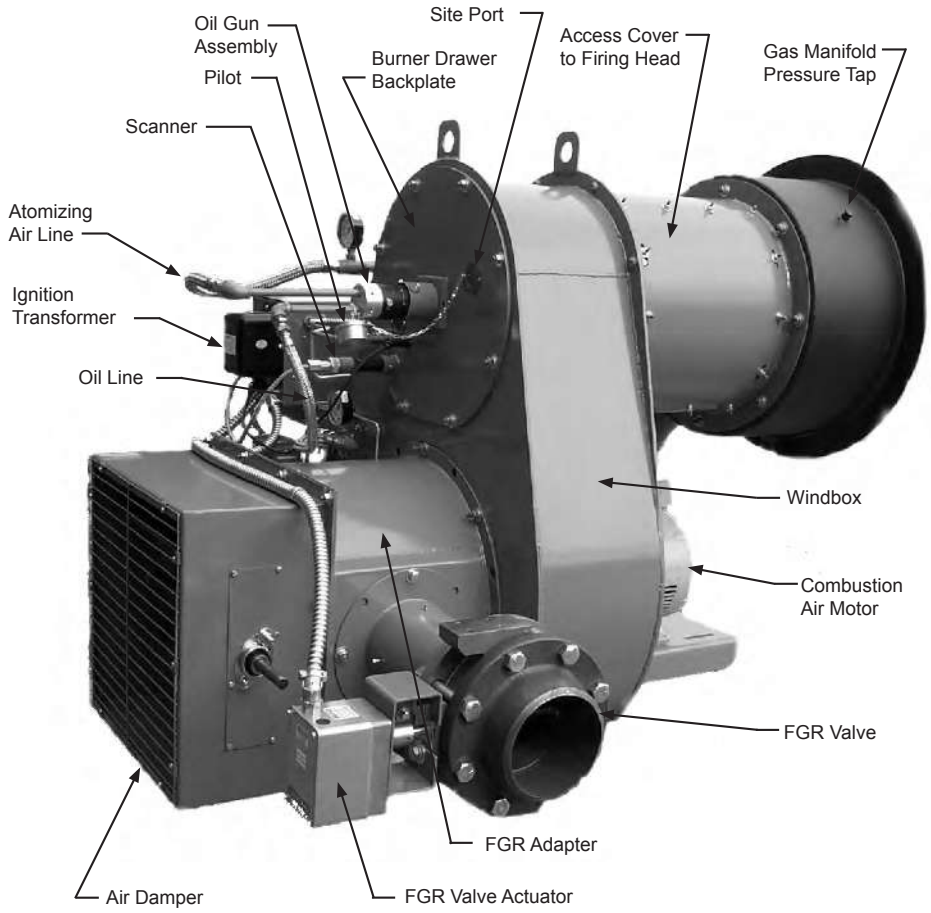

Figure B-2
HDSX General Arrangement, Right Side
(Shown With Optional Linkageless Control)

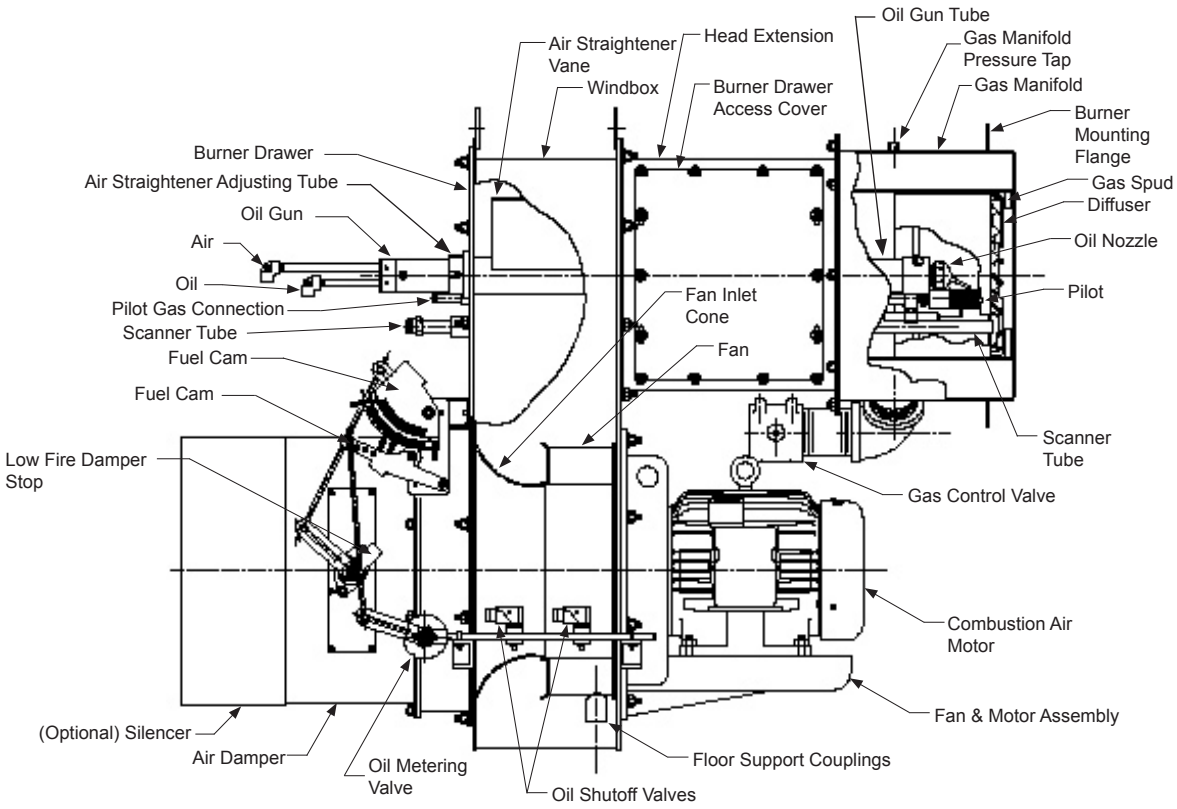

Figure B-3
HDS General Arrangement

Figure B4 not pictured

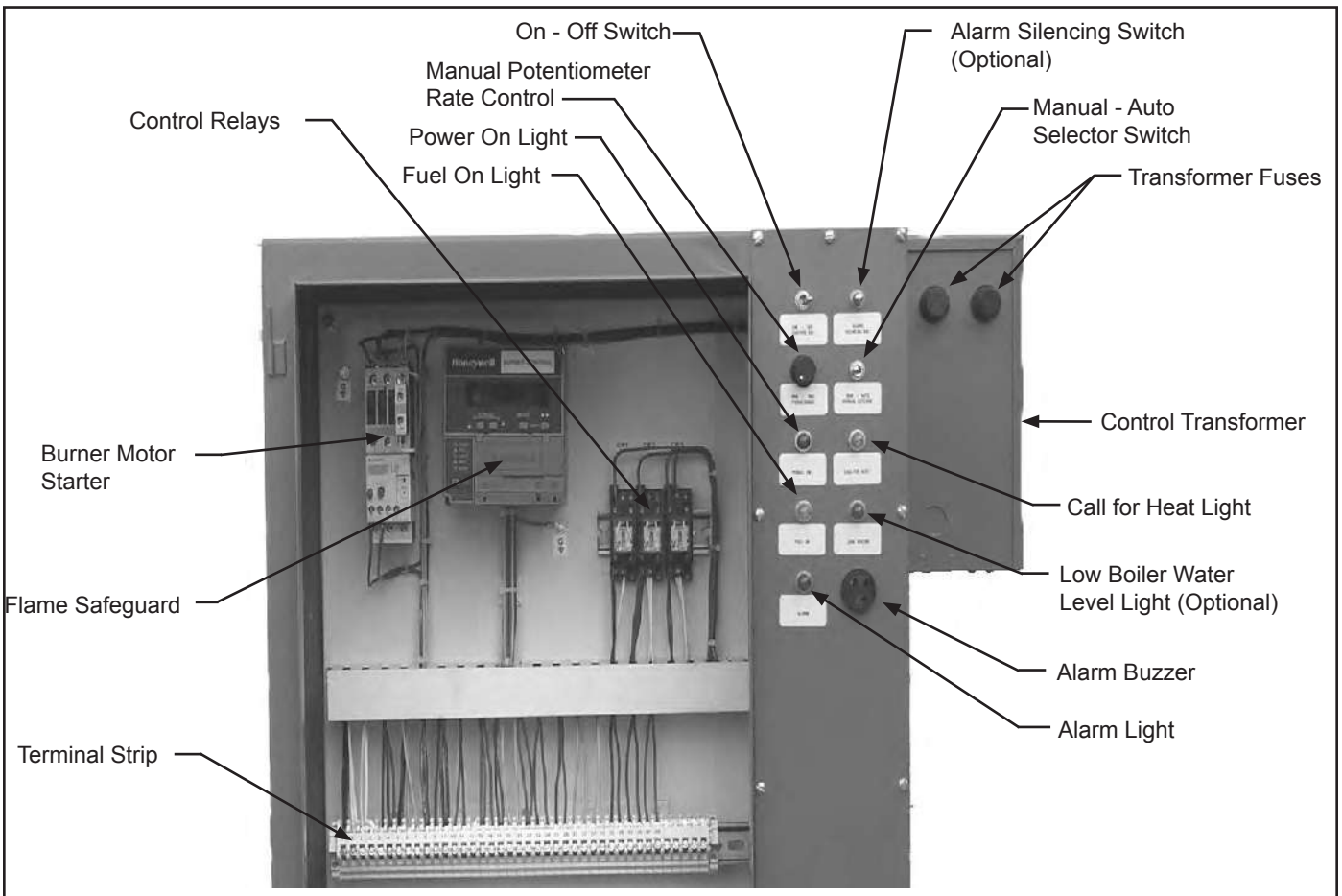

Figure B-5
Control Panel (Gas Shown)

1. General

The HDS and HDSX burner lines are configured from a common group of components that may vary in size and style depending on the capacity, NOx level, fuels and application. These common groups of components are described in this section, however the exact detail of any specific burner must be taken from the unit specific information provided with each burner. This would include the material list, wiring diagram, catalog cuts and fuel train drawings.

2. Combustion Air

Fan

A backward curved fan is used to supply the combustion air to burn the fuel. If the burner is equipped with FGR for low NOx, the fan will also provide the recirculated flue gas. The fan diameter and width will vary to match the required combustion air flow rate, FGR rate, burner altitude and vessel backpressure. The fan operates at 3550 rpm.

An inlet cone (Figure B3) is used with the fan to provide a smooth air flow transition to the fan. Each fan has a matching inlet cone. In some cases, the inlet cone bolts directly to the housing and in other cases, it bolts to an adapter that bolts to the housing. The inlet cone should extend into the fan inlet about 1/4 inch.

Fan and Motor Assembly

The combustion air fan and motor are assembled together on a motor support plate that attaches to the windbox. This assembly, as shown in the photo (Figure B-6), is built and balanced as a sub-assembly that can be removed for maintenance and repair.

The fan has a hub that is machined to match the motor shaft diameter and key. Setscrews are used to lock the fan to the hub. The fan can be adjusted on the shaft to provide the correct overlap between the fan and inlet cone.

Several different motor styles can be used depending on the application. An Open-Drip-Proof style is most common and used in a typical enclosed, clean environment. A TEFC (Totally Enclosed Fan Cooled) would typically be used in a dirty or wet environment. Other styles are also available for special applications. The motor dimensions, including the shaft diameter can vary by motor type.

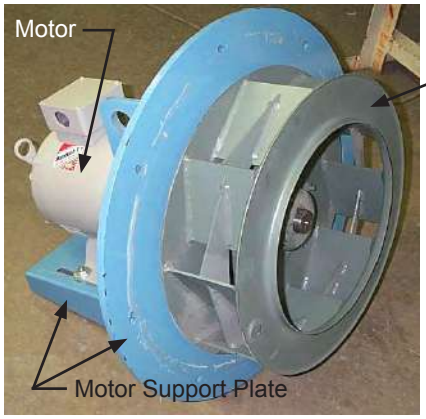

Figure B-6
Fan and Motor
Assembly

Windbox
The windbox is an enclosure that routes the combustion air from the fan to the firing head and provides the primary mechanical structure for all of the components of the burner. The combustion air fan and inlet cone are contained within the windbox. The firing head is connected by the head extension. The FGR adapter and air damper are also connected to the windbox, opposite the combustion air motor.

The windbox serves as the building block of the burner. It requires good structural support to the boiler and floor to handle the weight and movement of rotating components.

Head Extension
The head extension connects the firing head to the windbox. It also allows different combinations of firing heads to be used with different fan and windbox sizes.

The head extension has an access door near the firing head to simplify inspection, adjustments and maintenance. This can also be used to simplify gas spud changes.

Air Damper
The air damper regulates the flow of air to the burner. It is available in a multi-blade and single blade configuration.

The single blade damper has adjustable edge plates that provide adjustment for leakage and a more linear relationship of damper movement to flow. For high turndown applications (greater than 6:1), seals are used on the blade ends of the single blade damper to improve air turndown. The multi-blade damper uses rubber seals on the blade ends to improve sealing. On a single point positioning system (linkage), the damper shaft is connected by linkage to the jackshaft. On a parallel positioning system (linkageless), the shaft is directly coupled to the actuator for the air damper.

The air damper mounts to the fan inlet and controls the air flow to the fan. On low NOx burners, the air damper is connected to the FGR adapter plate, so that the flue gas can enter down-stream of the damper where there is a negative pressure. If an optional silencer were used, it would be mounted to the inlet of the air damper.

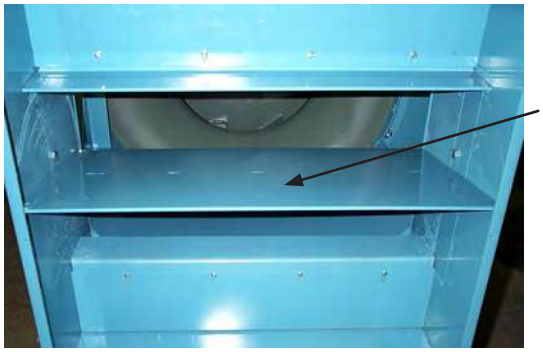

Figure B-7 Single Blade Air Damper

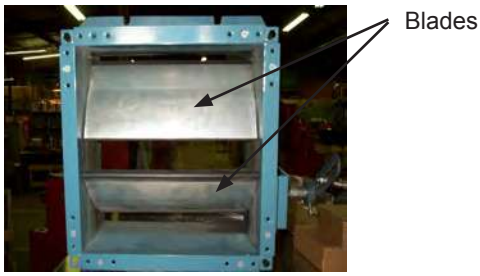

Figure B-8 Multi-blade damper

3. Burner Drawer

The burner drawer contains the pilot, scanner, diffuser and oil gun. These components are all attached to the backplate. The burner drawer is removed as a complete unit for adjustment and inspection. The burner drawer slides through the windbox, head extension and into the gas manifold. It is attached to the burner by bolting the backplate to the windbox.

Figure B-9 Burner Drawer Assembly

The pilot, scanner, oil gun and diffuser position can be adjusted (in and out) by sliding the tube through the backplate. Setscrews are used to lock these tubes into position. The oil gun can be removed for inspection or extended gas firing without removing the burner drawer.

Diffuser
The diffuser provides the directional control of the combustion air for mixing and combustion stability. The diffuser uses a combination of outer swirl air and inner straight air. An inner ring is fastened to the diffuser in some applications.

Figure B-10 Diffuser

The diffuser is mounted to the oil gun tube and can be adjusted by moving the oil gun tube in and out. The fin opening and hole diameter can vary within a burner size, depending on input and NOx level.

Scanner
The scanner is mounted to a sight tube that extends past the face of the diffuser where it can detect the pilot or

Figure B-11 Pilot and Scanner Sight Tube

main flame. This location insures that it does not see the spark of the pilot or reflection off the refractory. The inside surface of the scanner tube must be kept clean to prevent it from absorbing the light and preventing the scanner from detecting the flame.

Pilot
The pilot uses a machined casting to provide a venturi to pull-in air and mix the gas and air prior to burning. A perforated screen is used on the outlet of the venturi to shield the base of the pilot flame from high velocity air. A raw gas tube is used to provide additional gas to the pilot and generate the proper pilot flame size. The ignition electrode provides a spark within the perforated screen to ignite the pilot flame.

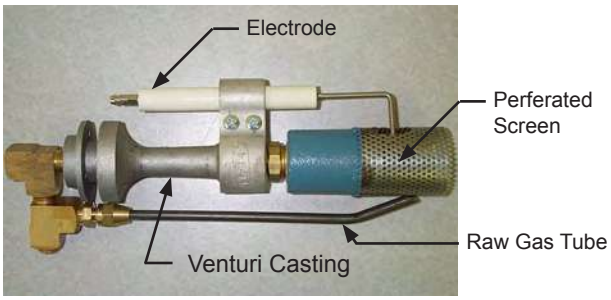

Figure B-12 Pilot

The pilot is positioned behind the diffuser, so that the pilot flame passes through the diffuser to ignite the main flame. It is located close to the scanner tube and in the upstream direction to cause the flame to pass in front of the scanner tube.

The pilot is connected to a gas pipe that extends through the backplate in the burner drawer and can be adjusted by moving the tube in the backplate. The electrode is mounted to the venturi casting.

Air Straightener
The air straightener (Figure B-9) consists of one or more plates in the burner drawer used to straighten the air before the diffuser. It is mounted to the oil gun tube.

On smaller units, a single blade air straightener is used (Figure B-3 and B-9). This blade can be adjusted in angular position as well as in and out. Larger burners use a multi-blade air straightener.

4. Gas Fuel Components

Gas Train
The gas train contains the safety shut-off valves, manual shut-off valves, pressure switches and other components that may be required for the specific installation, available

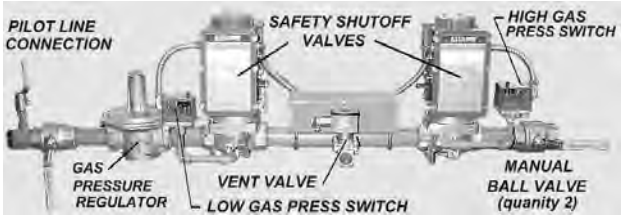

Figure B-13 Typical Gas Train

gas pressure, insurance codes and local regulations (Figure D-1). The details of the gas train can vary greatly from burner to burner. Gas trains tend to be designed for each application and a unit specific gas train assembly drawing is provided for each unit, identifying the major components. Details are provided in the burner manual included with each burner.

The gas train shown in Figure B-13 uses a gas pressure regulator upstream of two safety shutoff valves. Another common style is to have the gas pressure regulation built into the second safety shutoff valve.

Gas Safety Shutoff Valve
Each gas train has two shutoff valves in the gas train. These shutoff valves are usually motorized to open and spring return to close. They may contain a proof of closure switch to prove that the valve is in the closed position prior to starting the burner.

High Gas Pressure Switch
This switch is located after the last shutoff valve and before the gas flow control valve. It is set at a pressure that is greater than the highest gas pressure expected at this location. If the gas pressure rises above this level, it will trip the switch and cause the burner to shut down.

Low Gas Pressure Switch
This switch is located before the first shutoff valve. It is set to a pressure that is below the expected gas pressure at this location. If the gas pressure falls below this setting, the switch will trip and cause the burner to shut down.

Gas Pressure Regulator
Each gas train must have a gas pressure regulator. The regulator insures a consistent supply pressure to the burner. Often the gas pressure regulator is the first item in the gas train or can be integrated into the second shutoff valve.

Gas Control Valve
The gas control valve is used to modulate the flow of gas fuel to the burner. On a single point positioning system (linkage), it is connected to the jackshaft and uses a fuel cam to make fine adjustments to fuel flow. With a parallel positioning system (linkageless), an actuator is connected to the gas control valve, and modulated by electronic control to the desired position. The gas control valve is located on the pipe that connects to the gas manifold.

Gas Manifold
The gas manifold (figure B-14) is a cylindrical chamber that has radial gas ports used to direct the gas fuel. Gas spuds are generally installed in these radial ports to improve the distribution of the gas. The gas manifold also holds the diffuser end of the burner drawer, which fits tightly into the gas manifold. This centers the diffuser in the gas manifold, which is required to obtain good mixing of the gas and air.

The face of the gas manifold is protected from the high flame temperatures by a refractory front plate, which is designed to withstand high temperatures. In addition, a ceramic blanket is used between the face of the manifold and the refractory to slowdown the transfer of heat.

Figure B-14 Gas Manifold

Mounting Flange
The primary support for the burner is the mounting flange on the gas manifold. This provides a clamping surface to attach the burner to the vessel. A fiberglass rope gasket (3/8" dia) is used to seal the mounting flange to the refractory front plate. The rope is wrapped around the flange several times to seal the full diameter of the flange. In addition, a ceramic blanket is used in front of the gas manifold to protect it from the internal temperatures of the furnace. The ceramic blanket should be 1" thick by 2" wide (Figure B-14)

Gas Spuds
A series of gas spuds are used to direct the gas into the air stream. These gas spuds are located around the circumference of the gas manifold. The gas spuds are arranged in a manner that gives good mixing of the air and fuel in conjunction with the diffuser.

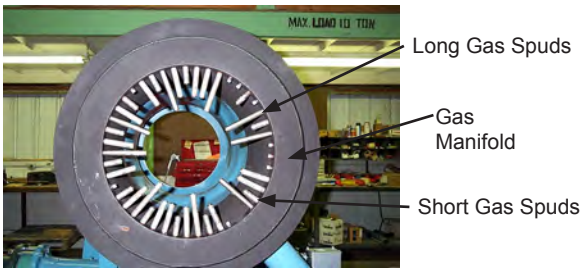

Figure B-15 Gas Spuds in Gas Manifold

Gas spud arrangement can change by fuel type, input and NOx level. In some cases, field adjustment of these spuds is required to meet different furnace configurations and field conditions.

The gas spuds are stainless steel pipe nipples (1/8" or 1/4") that are screwed into the gas manifold. Some of the holes in the manifold are plugged with pipe plugs. "Never-Seize" must be used on the pipe threads to prevent them from seizing due to the heat at this location.

5. Oil Fuel Components

There are two different types of oil firing available; air atomizing and pressure atomizing. The air atomizing system requires an air compressor, or as an alternate, plant air or steam. Air atomizing can be used on any burner size.

The pressure atomizing system uses higher oil pressures to atomize the oil. It will use three return flow oil nozzles in a tight cluster to provide atomization. Pressure atomizing is limited to #2 oil and up to 400 BHP.

Oil Pump
The oil pump is used to supply the oil to the nozzle at sufficient flow and pressure for the nozzle. The oil pump is provided as a separate item that must be mounted, wired and piped. The assembly consists of the pump, motor, coupling, pump-motor bracket and oil pressure regulator. The motor base mount is used to secure the assembly.

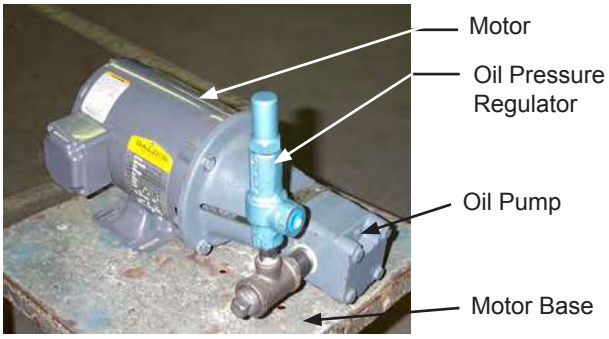

Figure B-16 Oil Pump and Regulator

Oil Pressure Regulator
An oil pressure regulator is used to maintain constant oil pressure to the burner. It is adjusted to provide the oil pressure needed at the nozzle.

Oil Supply Pressure Gauge
This indicates the oil supply pressure from the pump.

Oil Train
The oil train contains the safety shut-off valves, pressure switches and other components that may be required for the specific installation, insurance codes and local regulations and can vary greatly from burner to burner. Oil trains tend to be designed for each application and a unit specific oil train drawing is provided with each unit. Details of the actual components are provided with each burner.

Oil Safety Shutoff Valve
Each oil train has two shutoff valves. The valves can be either solenoid or motorized type and can have an optional POC (proof of closure) switch.

Low Oil Pressure Switch
This switch is set to a pressure below the expected oil pressure and will trip if the oil pressure drops below this level, shutting down the burner.

High Oil Pressure Switch
This optional switch is set to a pressure above the expected oil pressure and will trip if the oil pressure rises above this level, shutting down the burner.

Manual Ball Valve
A manual valve is provided in the oil line to perform testing of the safety controls as part of the normal startup procedures.

Oil Flow Control Valve
The oil flow control valve regulates the flow of oil to the nozzle. In the air atomizing system, the control valve is in the piping to the nozzle, directly regulating the flow of oil to the nozzle. In the pressure atomizing system, the control valve is located in the return line from the nozzle, controlling the return flow, which indirectly controls the oil flow to the nozzle.

The oil flow control valve modulates with the air damper to provide different input rates. On a single point positioning system (linkage), it is connected to the jackshaft and uses a fuel cam to make fine adjustments to fuel flow. With a parallel positioning system (linkageless), an actuator is connected to the oil control valve and modulated by electronic control to the desired position.

Oil Nozzle
Several different types of oil nozzles may be used depending on the type of oil system, burner size, turndown and application. They all share a common purpose of atomizing the oil into small droplets so that they will easily and quickly burn. All of the nozzles are mounted to the end of the oil gun and are inserted into the support tube. The position of the nozzle can be adjusted by moving the gun in the tube. The oil nozzles and gun have a “Top and Bottom” position that is critical for correct operation. The end of the oil gun is marked with the word **“TOP”**.

Figures B-17 and B-18 shows the components of typical air atomizing nozzles. The nozzle tip and swirler are lapped together to form a perfect fit and can only be used together as a matched set. Other air atomizing nozzles may have slightly different construction.

Figure B-17 Typical Small Air Atomizing Oil Nozzle

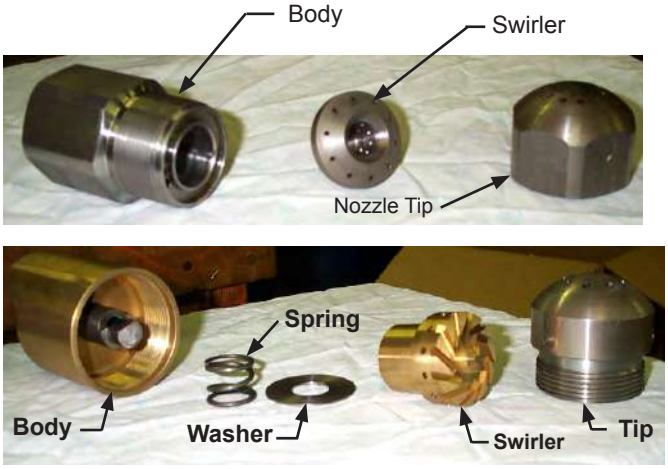

Figure B-18 Typical Large Air Atomizing Oil Nozzle

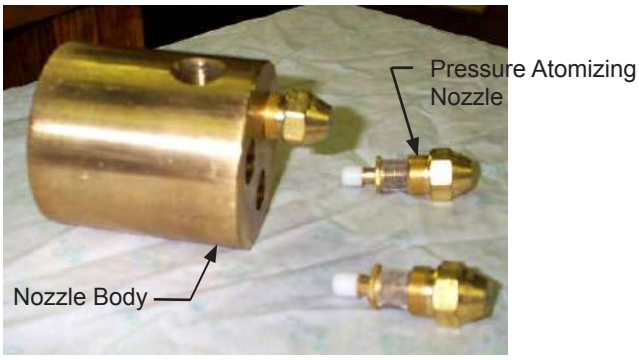

Figure B-19 Pressure Atomizing Oil Nozzles

The pressure atomizing nozzle assembly (Figures B-19) contains three smaller nozzles that are screwed into a common body. These nozzles are not intended

to be cleaned internally, however they can be cleaned on the surface and the oil screen. The nozzles should be replace periodically when the combustion shows signs of deterioration.

Oil Gun
The oil gun (B-9) consists of the oil nozzle and pipe connections for the nozzle. The oil gun slides into the guide tube. Two blocks are used to keep the gun centered in the guide tube and lock the gun to the end of the guide tube.

The gun assembly must be mounted in the correct (vertical) position, with the word "TOP" located on top of the gun assembly. This will allow for even oil distribution and prevent oil dripping out of the gun and lines after shutoff.

Nozzle Oil Pressure Gauge
This gauge indicates the oil pressure at the oil nozzle. This reading is important in determining proper operation of the nozzle for atomization at any given firing rate. There is a wide range of possible pressures, but typically it is in the range of 15 to 60 psi for air atomizing and 55 to 160 psi for pressure atomizing.

Nozzle Atomizing Air Pressure Gauge
(For air atomizing burners only) This indicates the atomizing air pressure at the nozzle. This reading is important in determining proper operation of the nozzle for atomizing the oil. The pressure can vary widely depending on the nozzle and rate, but typically it will be in the range of 15 to 40 psi.

Air Compressor
The air compressor, if used, provides air to the oil nozzle to atomize the oil. The compressor assembly includes the compressor motor, relief valve and flexible connection to isolate the vibration of the air compressor. The large air compressor (Figure B-20) is equipped with rubber mounts that must be used when mounting the compressor to a base.

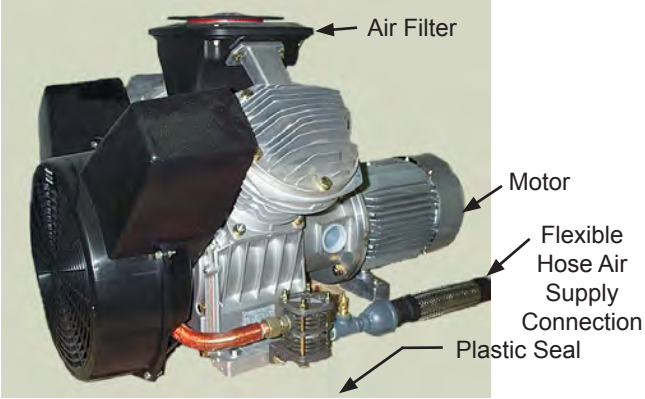

Figure B-20 Large Air Compressor

Figure B-21 Small Air Compressor

Air Bleed Valve and Muffler
An air bleed valve is provided with air atomizing systems to allow some of the air to bleed off and lower the atomizing air pressure to optimize the oil atomization. An air muffler is provided to reduce the noise from this air flow. In some cases, the bleed valve modulates with firing rate.

6. Flue Gas Recirculation (FGR)

The flue gas recirculation components in this section only apply to the HDSX model that uses recirculated flue gas to reduce the NOx emissions.

FGR Adapter
The FGR adapter provides an interconnection between the housing and air damper, placed in the air flow stream to introduce the FGR. This location allows the FGR to be "induced" into the air stream, because of the negative pressure downstream of the air damper and created by the burner blower wheel.

The FGR adapter has an access cover opposite the FGR line. This is used to gain access to the FGR inlet tube and for inspection and cleaning of the fan.

FGR Inlet Tube
This tube is inside the FGR adapter, and is positioned to enhance the induction or negative pressure in the FGR line. The tube can be adjusted to provide more or less pressure by sliding it into or out of the air steam. Two setscrews are used to lock the tube into position. The tube can be adjusted internally by removing the access cover on the FGR adapter.

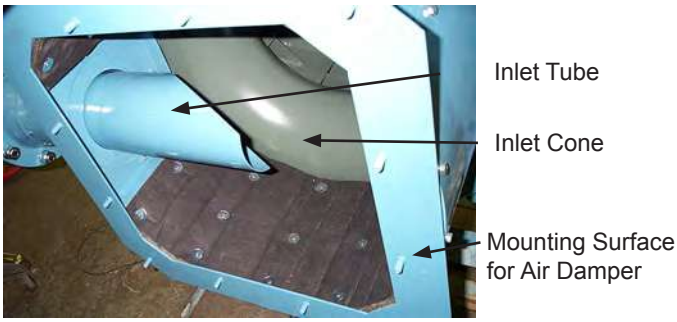

Figure B-22 FGR Inlet Tube

Airflow over this tube, especially at high rates, creates a negative pressure at the FGR duct. The more this tube is moved into the air steam, the more negative pressure is created.

FGR Control Valve
The FGR control valve controls the flow of recirculated flue gas. The valve is connected to the FGR adapter and inlet tube, which creates the pressure differential for flow. This valve is normally smaller then the FGR duct line to provide better flow control.

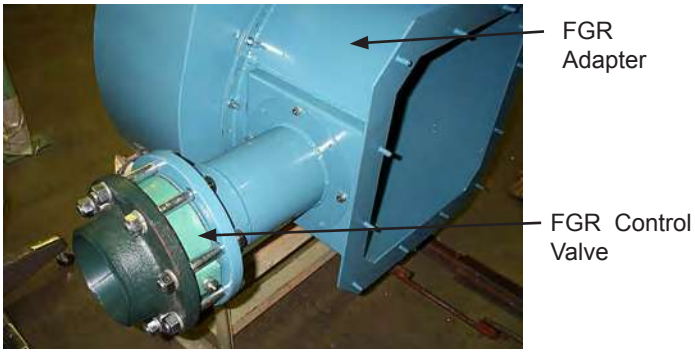

Figure B-23 FGR Control Valve

The FGR control valve modulates in conjunction with the fuel and air valves to provide different input rates. On a single point positioning system (linkage), it is connected to the jackshaft. With a parallel positioning system (linkageless), an actuator is connected to the FGR control valve and modulated by electronic control to the desired position.

FGR Shutoff Valve
Single point positioning systems (linkage) require a separate FGR shut-off valve that prevents flow during the purge cycle. The valve is driven by a motor to close the FGR line during the purge cycle. Parallel positioning systems will modulate the control valve shut during purge and do not require a shut-off valve.

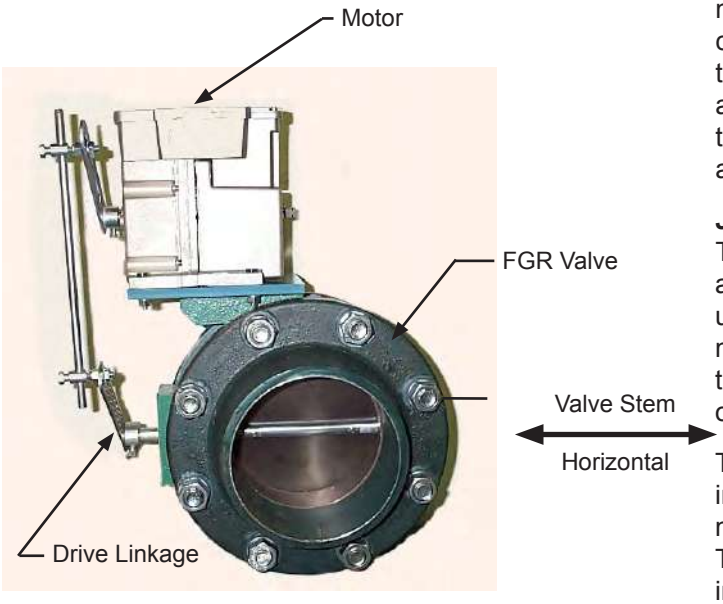

Figure B-24 FGR Shutoff Valve

The shutoff valve should be installed in the FGR duct close to the boiler connection. The valve stem should be horizontal, to prevent condensate from building in the shaft bore, causing it to seize.

When firing oil, this valve may be closed or it may be partially open to provide some FGR. If the valve is intended to be partly open, there will be a potentiometer in the control panel to adjust the position of this valve.

FGR Duct
The FGR duct provides the connection between the boiler outlet and the control or shut-off valve. The design of this duct is very important for proper operation and to prevent maintenance problems (see Section C).

7. Fuel-Air-Ratio Controls

The burner may be equipped with single point positioning (linkage), multiple setting modulating motor or parallel positioning system (linkageless). All of these systems provide the basic fuel-air-ratio control required for good combustion, however they can provide different features and setup capabilities.

Modulating Control
The burner modulates to match the energy requirements of the load. It does this by using a sensor that measures the pressure or temperature of the system and a matching sensor in the modulating motor that moves to match the readings of the sensor.

In some optional systems, a similar process is used with an external control that provides a signal to the motor to go to a certain rate. These systems may include multiple burner sequencing, outside temperature compensation and numerous other control strategies.

Single Point Positioning (Linkage)
Single point positioning systems use a single modulating motor to vary the fuel input, air flow and other flow changes like FGR and atomizing air flow. Linkage is used to connect these flow control elements together to provide a unified fuel-air-ratio control system. Other elements in this system would typically include a jackshaft, fuel cam and modulating motor.

Jackshaft
The jackshaft is a shaft that is used to tie the fuel, air and FGR valves together with linkage, to provide a uniform change in the flow as the burner modulates. A modulating motor is used to drive the jackshaft, driven by the requirement for heat in the system and as allowed to operate by the flame safeguard.

The jackshaft is a 3/4” shaft that rotates and is mounted in bearing supports. This provides a common means of modulating all of the valves from a single drive mechanism. The length can vary to meet overall dimensions and individual drive arms are used to connect to each valve.

Fuel Cam
A fuel cam is a mechanical linkage that allows for small fuel rate changes without changing the linkage setting. It can simplify the fuel-air-ratio adjustments during the burner setup (Figure B-3 and B-4).

Modulating Motor

The jackshaft is driven by a modulating motor that rotates 90° to modulate the burner input from minimum rate to maximum rate. Linkage is used to connect the modulating motor to the jackshaft and the fuel cams along with connecting the fuel, air and FGR control valves to the jackshaft.

The standard modulating motor has two internal proving switches. One switch, the Low Fire switch, proves the low fire position where the burner will light. This is also the position the modulating motor will travel to when the burner shuts down. The second switch, the High Fire Purge switch, proves the high fire purge position during pre-purge.

Multiple Setting Modulating Motor
In some burner configurations, there are different ideal settings for oil and gas firing, especially when higher turndown is desired. This can be accommodated with an optional modulating motor that has different low fire and high fire positions for gas vs oil.

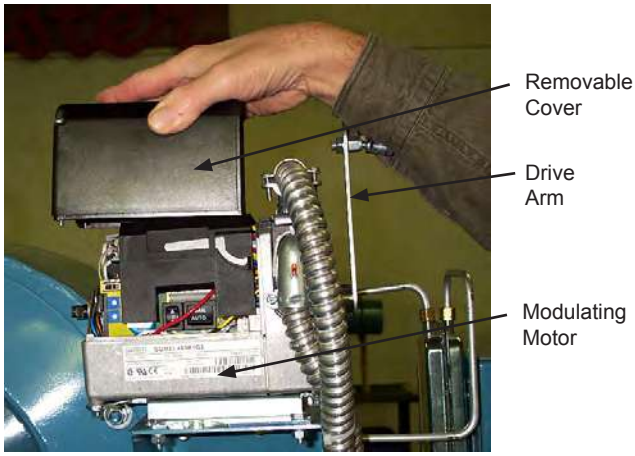

Figure B-25 Landis Mod Motor Adjustments

This optional modulating motor uses four to eight internal switches. One switch is used to prove the high fire purge position during pre-purge. A second switch is used to prove the fully closed position. This is the position of the motor when the burner is off. A third switch is used to prove the ignition position. This is the point at which the burner will light. A fourth switch is the low fire position. This is the position of the lowest firing rate of the burner. It can be different from the ignition position, if desired. If the burner is a combination gas-oil burner, two additional switches may be used. These switches do the same function as the third and fourth switches already listed, but can be set up to allow for different ignition and low fire positions for gas and oil operation. There is also a 7th and 8th switch that can be used to accommodate two different high fire settings. See the burner wiring diagram to determine the switch numbers and functions.

Oil Limiting Potentiometer
The fan is sized for air at rated capacity plus the quantity of FGR required for gas NOx emissions. When firing oil, the FGR rate is usually reduced, providing a larger fan capacity than desired. To prevent the burner from over firing on oil, a limiting potentiometer is used to limit the oil rate. In this mode, the modulating motor is restricted in its travel to something under 90°.

This potentiometer is located in the control panel and is adjusted at startup to provide the correct oil firing rate.

Parallel Positioning System (Linkageless)
The Posi-Control system is a parallel positioning system (linkageless) that uses individual actuators for each control valve and a computer controller that directs each actuator to provide the input change from minimum to maximum capacity. The control provides more flexibility in setting each fuel rate (Figures B-1 and B-2).

8. Electrical Controls

Control Panel
The control panel (Figure B-5) contains the flame safeguard control, relays, terminal strips for electrical connections and other components required for the control of the unit. Other components may be included for the operation of the boiler, for example, a low water cutout relay.

Flame Safeguard
The flame safeguard (Figure B-5) provides operational control and safety sequencing for the burner. Safety limits are tied to the unit and it controls the operation of the fuel valves. The flame scanner is part of this control and can detect a flame failure causing a safety shutdown. There are several different flame safeguard models available with different features and cost levels. They can provide fault annunciation and communications with other controls. The details of the control used in the burner are supplied with the unit.

On-Off Switch
This switch is used to start and stop the burner by opening or closing the limit circuit to the flame safeguard control.

Manual-Auto Switch and Potentiometer
The Man-Auto switch is used to select what signal source is used for modulation control of the burner. With the switch in the “Man” position, the burner firing rate is determined by the position of the manual potentiometer. With the switch in the “Auto” position, the burner firing rate is determined by the signal from the boiler modulating controller. When in the “Auto” position, the manual potentiometer can limit the firing rate of the burner from anywhere between low fire and high fire. The modulating motor will always drive open and closed during pre-purge, regardless of the position of the Man-Auto switch and potentiometer.

Fuel Transfer Switch
This switch selects the proper fuel for firing. It has a center off position that prevents moving the switch from one position to the other, without momentarily stopping in the center off position.

Power On light
Indicates power is applied to the control panel.

Call For Heat light
Indicates the burner On-Off switch is closed and the boiler limits are closed.

Fuel On light
Indicates the main fuel valve circuit has been energized.

Alarm light
Indicates the flame safeguard control is in a safety shutdown and lockout condition. The flame safeguard control reset button must be pressed before the burner can operate again.
On some burners the Alarm light may also be used to indicate other failure conditions such as low water, high limit, etc. See the burner wiring diagram for details of what other controls may be wired to the Alarm light.

Junction Box
The junction box contains the electrical connections that are required between the burner and control panel.

Manual Potentiometer Rate Control
The manual potentiometer is used to manually position the firing rate when the burner “Auto-Manual” switch is in the “Manual” position. This is used to setup and check the burner. When in the “Automatic” position, this potentiometer acts as a firing rate limiting potentiometer. Placing it at the low fire position will prevent the burner from modulating above low fire. For normal automatic operation, this must be positioned at the full rate (clockwise) position.

Control Transformer (Optional)
The control circuit transformer is used to reduce the main power input to 115 VAC for the control circuit. If this electrical supply could be provided as a separate input, this transformer would not be required. The transformer has two fuses located on the transformer box.

Alarm Bell
The alarm bell (or buzzer) provides an audible noise if the burner were to lock out due to an alarm condition.

Control Relays
Relays are provided to support electrical options. The number and type of relays will vary with the equipment. These relays will be indicated on both the wiring diagram and material list.

Motor Starters
At least one motor starter, for the combustion air fan, will be included in each control panel. If other motors are used, for an oil pump or air compressor, these will also be located in the control panel.

C. Installation

1. General Considerations
2. Refractory Frontplate
3. Burner Mounting
4. Gas Piping
5. General Oil Piping
6. Pressure Atomized Oil
7. Air Atomized #2 oil
8. Gas Pilot
9. FGR System
10. Draft and Stacks
11. Electrical System

This section covers the installation procedures for each of the standard systems offered on the HDS burner line. Your specific burner will not have each of these systems and may be supplied to you as an installed system. If you receive the burner as part of a new boiler for example, the burner will be installed in the vessel with much of the piping already done. For this reason, a complete review of the installation is required to determine which tasks are complete and which need to be done.

THE INSTALLATION OF THE EQUIPMENT SHALL BE IN ACCORDANCE WITH THE REGULATION OF AUTHORITIES HAVING JURISDICTION, INCLUDING THE NATIONAL ELECTRICAL CODE, INSURANCE REGULATIONS, CSA STANDARDS 139 AND 140, THE CANDIAN NATIONAL ELECTRIC CODE AND ALL LOCAL CODES.

The equipment shall be installed in accordance with the state and local requirements and in Canada, in accordance with Provincial Installation Requirements, or in their absence, the CGA B149.1 and B149.2 codes shall prevail. Authorities having jurisdiction should be consulted before installations are made.

NOTE TO INSTALLER: The main power disconnect for this equipment must be conspicuously labeled and placed within sight of the operating system and equipped with lockout provisions.

1. General Considerations

In the initial planning of the installation, several items must be covered:

a. Prior to starting the installation, all the technical literature should be collected and reviewed to identify requirements. As a minimum, these should include the Installation and Operating Manuals for the burner and vessel, the wiring diagrams, the fuel schematics and technical literature on supplied controls.

b. A general overview of the equipment should be made prior to the installation. Check the location of access doors and insure that they will be able to function properly when all equipment is installed. The burner and control panel should have sufficient clearance for the operator to monitor, inspect and perform maintenance. A minimum clearance of 24 inches all around the burner should be provided for maintenance. The burner drawer and oil gun is pulled out from the front of the burner and there needs to be sufficient space for this activity. An HD5 requires 42 inches, an HD7 requires 46 inches and an HD9 requires 54 inches of clearance behind the backplate.

c. A source of combustion air must be provided for the burner. Local codes often determine minimum requirements, and these must be followed. In absence of other codes, the following can be used.

Webster recommends two air sources be provided, one located high and one low. Each air source must be at least 1 ft^2. If there are multiple burners, the area must consider all burner requirements. Exhaust fans are not recommended as they create additional air flow requirements that must be included in the area calculation.

The quantity of air required for combustion and ventilation is 10 cfm/BHP. The maximum air velocity is 250 ft/min from the floor to 7 feet high, and 500 ft/min above 7 feet high. Outdoor louvers may restrict the open area, and if the exact restriction is unknown, a restriction of 20% can be used. Add 3.5% to the area for each 1000 ft above sea level. The calculations are,

Total air required (cfm) = BHP x 10
Open area = cfm / velocity
Louvered area = open area x 1.2 (or actual)
Area of opening = louvered area / 2

For example, with duct located under 6' high for a 500 HP boiler, what would their area need to be? The total air is (500 BHP x 10 cfm/BHP) = 5000 cfm. The maximum velocity is 250 ft/min, so the open area must be = (5000 cfm / 250 ft/min) = 20 ft^2. Since these opening will have louvers, the actual openings must be = (20 ft^2 x 1.2) = 24 ft^2. There will be two opening, so each will be = (24 ft^2 / 2) = 12 ft^2.

The location of the combustion air source must not create a condition where the burner or vessel comes in contact with very cold air (under 40°F) or causes large fluctuations in combustion air temperature. Cold air can cause condensation below 40°F in a standard burner and below 50°F when equipped with FGR.

There should be no large variations in combustion air temperature supplied to the burner. The burner can be adjusted to handle temperature variations of 30°F, but may not be able to handle temperature swings of 50°F without combustion deterioration. In conditions where this can occur, some conditioning of the combustion air must be done by location, baffling or pre-heating of the air. Seasonal tune-ups can also help cover the larger temperature swings.

d. There are several people that should be notified before starting, including the owners representative, the mechanical contractor, the electrical contractor, the service organization and the boiler manufacturer.

e. **DO NOT USE TEFLON TAPE** or compounds with Teflon content as an oil or gas pipe sealant. Teflon can cause valves to fail creating a safety hazard. Warranties are nullified and liability rests solely with installer when evidence

of Teflon is found.

f. Installer must clearly identify the main electrical power disconnect and the manual shutoff valve on the gas supply drop line to the burner.

2. Refractory Frontplate

The refractory front plate is used to adapt the burner to the vessel. While the specific dimensions will vary with different vessel and burner configurations, all will be similar in shape to that shown in Figure C-1. A mounting flange on the frontplate is used to clamp the frontplate to the vessel. Bolts on the frontplate are used to clamp the burner to the frontplate. High temperature fiberglass rope gaskets are used to seal each connection.

A rope gasket is applied to full surface of the frontplate mounting flange (it must cover the full face of the flange) to seal the refractory front plate to the vessel (a spray adhesive can be used to hold the gasket in place temporarily). The refractory frontplate is inserted into the furnace and clamped to the end of the furnace. The refractory must be centered in the furnace, so that the gap between the refractory and furnace is uniform. Clamp the frontplate to the furnace with uniform tension on the bolts, starting with a low torque for all bolts and then repeating with higher torque levels until tight.

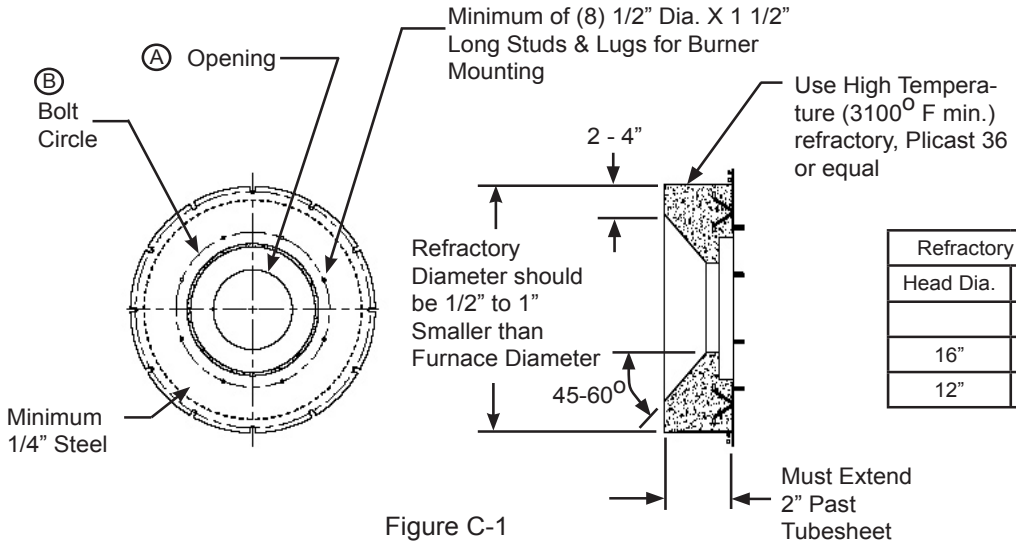

Refractory Frontplate Dimensions		
Head Dia.	A	B
16"	16"	27.0"
12"	12"	23.3"

Figure C-1
Refractory Frontplate

Pack the gap between the refractory and furnace with ceramic blanket insulation (or ceramic rope) for at least 4 inches from the end of the refractory (Figure C-3). This can be accomplished by reaching in from the center hole, and placing the insulation between the refractory and furnace, then pushing it in with a block.

3. Burner Mounting

A rope gasket is applied to the burner mounting flange, completely covering the flange (the 3/8" fiberglass gasket is provided with the burner). A ceramic insulation is placed on the end of the burner, as shown in Figure C-2. A spray adhesive can be used to hold these in place prior to installation.

The burner is then inserted into the frontplate, centered evenly (the 2 inch recess will center the burner) and clamped into position. Clamp the burner to the frontplate with uniform tension on the bolts, starting with a low torque for all bolts and then repeating with higher torque levels until tight.

Figure C-2 Ceramic Blanket and Rope Gasket

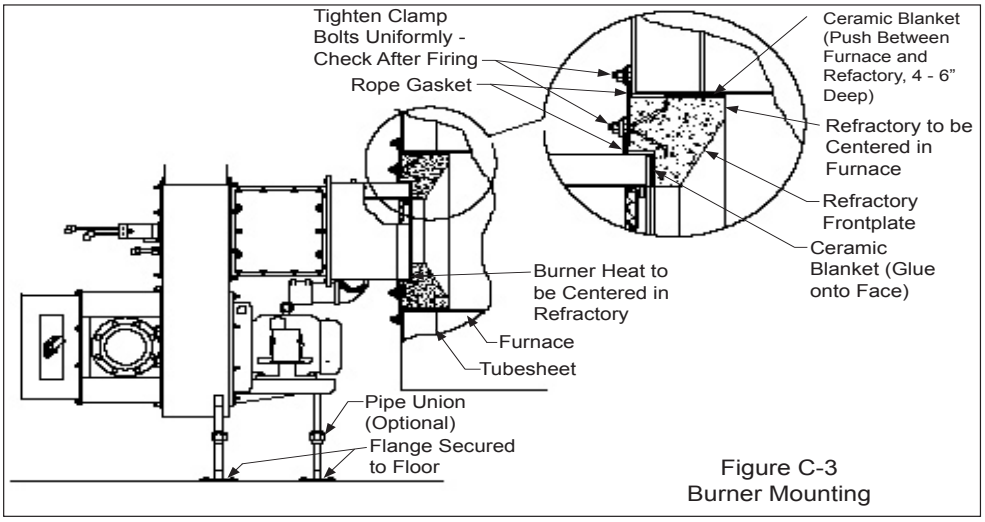

Figure C-3
Burner Mounting

The burner should be checked for level and must be perpendicular to the vessel. If the burner is not level or perpendicular, loosen the mounting clamps, reposition the burner and retighten. This will properly align the burner flame with the furnace and allow the proper flow of liquid. Oil combustion will not work properly if not level.

The burner is equipped with mounting supports to secure it to the floor. These are 1 inch pipe coupling attached to the burner. There are two on the housing and for larger burners, one or two in the motor mounting plate. To secure the burner to the floor, pipe sections are installed to these couplings and a flange mount is secured to the floor, as shown in Figure C-3.

4. Gas Piping

WARNING
DO NOT USE TEFLON TAPE OR COMPONDS CONTAINING TEFLON. THIS COULD DAMAGE THE VALVES CREATING AN UNSAFE OPERATION

NOTE TO INSTALLER: The manual shutoff valve on the gas supply drop line to the burner must be conspicuously labeled.

Figure C-4 shows a typical gas piping schematic, although some components can vary based on size, insurance and other requirements. Consult the job specific gas train piping schematic (provided with the burner if train is supplied by Webster), along with a detailed list of components for specific details. This must be followed to properly locate the components in the gas .

The gas piping must comply with all local and state codes and must be in accordance with the local gas company and insurance requirements.

If the gas train has not been factory assembled, the components should be assembled as indicated on the gas piping schematic furnished with the burner. The section between the two manual shutoff valves is mounted securely to the base rail on the side of the vessel. A drip leg should be provided upstream of the first manual valve to collect any moisture or contaminates.
Some general considerations for this installation are:
a. The piping to the burner must be sized to provide gas at the pressure and volume indicated on the order.
b. The gas piping should be installed according to local regulations and any applicable insurance requirements.
c. The gas pressure regulator usually requires a minimum straight length of pipe leading into and from the valve for proper operation. Also some regulating valves require a downstream pressure tap that must also be located at a certain dimension from the valve. These details are provided in the job specific details provided with the burner.
d. The piping between the train and burner must be done in a manner that will minimize the pressure drop. The pipe size should be the larger of the two connection points (on the train or the burner connection) and must use a minimum amount of elbows.
e. The gas piping should be cleaned to remove filings and other debris common in the construction process.
f. The piping should be pressure tested with inert gas at two times normal operating pressure before use.

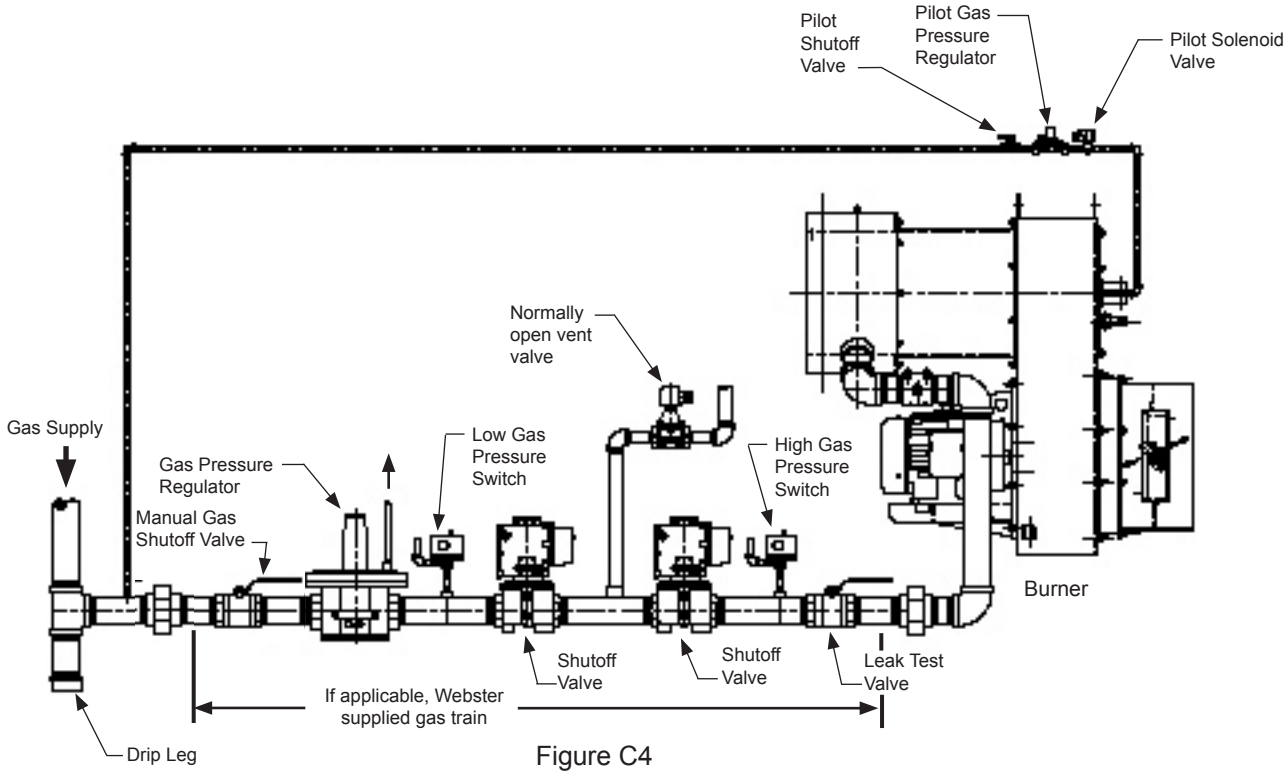

Figure C4
Typical Gas Piping

5. General Oil Piping

WARNING
DO NOT USE TEFLON TAPE OR COMPONDS CONTAINING TEFLON. THIS COULD DAMAGE THE VALVES CREATING AN UNSAFE OPERATION.

The amount of oil piping required in the field will depend on the type of system and how the burner was purchased. If the burner was factory mounted to the boiler, much of the installation work may already be complete. Units with heavy oil have more complexity built into them and will require more installation effort. The items identified in this manual assume that none of the installation work has been done by others.
The oil piping must be constructed to provide the flow and maintain the pressure required for proper system operation. Refer to the previous section for details on each of the different types of oil systems and how they operate.

Some of the actions required for successful piping systems are:
a. Oil storage tanks and piping must conform to The National Fire Protection Association "Standard for the Installation of Oil Burning Equipment NFPA-31", local ordinances and EPA underground storage tank requirements.
b. Oil lines shall be substantially supported and protected against physical damage. Buried lines shall also be protected against corrosion.
c. After installation and before covering, buried lines should be pressure tested for leakage.
d. Cast iron fittings should not be used.
e. Aluminum tubing should not be used.
f. Proper allowance should be made for expansion and contraction, jarring, vibration and tank settling.
g. Always run full size lines.
h. Suction and return lines shall be as short as possible.
i. The oil lines must be cleaned to remove water, rust and foreign matter. A common method of cleaning the oil piping is to temporarily install a short copper tube to the pump inlet, feeding the pump oil from a bucket. The gauge must be removed and the tapping plugged. The pump is run for a short time by manually engaging the motor starter by pushing it with a piece of wood. If flow does not establish within 2 minutes of engaging the pump, shut the pump off and run through the priming procedure again.
j. The standard oil pumps supplied on the HDS are Viking Model SG operating at 1750 rpm. These pumps can provide suction (vacuum) of 10 inch of Hg when used to pull from a tank. If a transfer pump is used, the maximum inlet pressure that the pump can tolerate is 15 PSIG, although most regulations require a maximum transfer loop pressure of 3 PSIG.
k. A strainer is required to protect the pump, valves and oil nozzle. This strainer is not part of the standard equipment supplied by Webster, but is intended to be supplied and installed by others. The strainer should have a maximum filter opening of 0.027" for #2 oil and sized to handle the full flow rate of the pump (Figure C-6 for optional pumps supplied by Webster). The strainer must

Figure C-5 Pump Flow Rates

BHP	Pump Flow Rates with #2 Oil (36 SSU)					Pump Flow Rates W/ #4 - #6 Oil (750 SSU)		
	Nozzle GHP	Pressure Atomizing		Air Atomizing		Nozzle GPH	Optional Oil Pump	
		Standard Oil Pump		Optional Oil Pump				
		Model	GPH	Model	GPH		Model	GPH
200	60	SG-0570	144	SG-0550	114	56	SG-0550	120
250	75	SG-0510	192	SG-0550	114	70	SG-0550	120
300	90	SG-0510	192	SG-0570	150	84	SG-0570	174
350	105	SG-0514	240	SG-0510	216	98	SG-0570	174
400	120	SG-0514	240	SG-0510	216	112	SG-0570	174
450	134	NA	NA	SG-0510	216	126	SG-0510	252
500	149	NA	NA	SG-0514	288	139	SG-0510	252
550	164	NA	NA	SG-0514	288	153	SG-0510	252
600	179	NA	NA	SG-0514	288	167	SG-0510	252
700	209	NA	NA	SG-0519	375	195	SG-0514	336
750	224	NA	NA	SG-0519	375	209	SG-0514	336
800	239	NA	NA	SG-0519	375	223	SG-0514	336
900	269	NA	NA	SG-0528	510	251	SG-0519	450
1000	299	NA	NA	SG-0528	510	279	SG-0519	450
1100	329	NA	NA	SG-0528	510	307	SG-0528	660
1200	359	NA	NA	SG-0711	660	335	SG-0528	660

also handle the pressure (maximum 25” vacuum). Retain and follow the strainer instructions supplied by the manufacturer. It is essential that these instructions be followed to insure proper filtration to protect the pump, valves and nozzle.

l. In Canada, refer to CSA Standard B139, “Installation Code for Oil Burning Equipment” for recommended installation procedures.

m. The oil lines and most valves are sized to handle the full pump capacity, as shown in figure C-5. The pumps are selected for a capacity of at least 1.5 times the maximum nozzle rate. If pumps are used with substantially higher flow rates, these selections may not function correctley. This is especially critical for the pressure atomized system where the metering valve is sized for the pump flow.

The selection of the oil pipe line size is critical for proper operation of the system. For simple systems, Figure C-6A can be used to select the oil pipe sizes. If the pipe routing or overall length is over 100 equivalent feet, the selection process needs a more detailed design review.

To determine the equivalent length of the oil piping, use the straight length of piping and add the equivalent length of straight pipe given for each fitting (figure C-6B).

Figure C-6A
Oil Pipe Line Sizes

	Light (#2) Oil			Heavy (#6) Oil (2)	
Boiler HP	Pump to Burner (1)	Tank to Pump (1)	Return Line (1)	Pump to Burner (1)	Return Line (1)
200-350	1	1	1	1.5	2
400-600	1	1	1	2	2
700-1000	1	1	1	2	2

Figure C7
Typical #2 Oil Field Piping

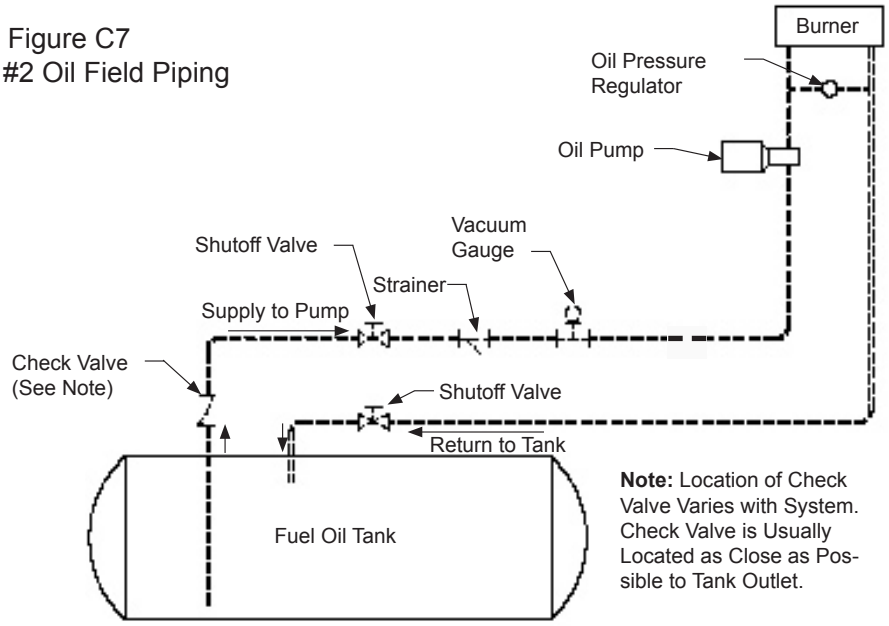

Notes: (1) Based on equivalent length of less than 100 ft of pipe.
(2) Oil must be heated to within 20°F of final temperature.
(3) For reference only, must be confirmed by design authority.

Figure C-6B
Equivalent Pipe Lengths

	Pipe Size (Schedule 40 Pipe)					
	3/4”	1”	1 1/4”	1 1/2”	2”	2 1/2”
90° Elbow	2.1	2.6	3.5	4.0	5.2	6.2
45° Elbow	1.1	1.4	1.8	2.2	2.8	3.3
“T” Side Out	4.1	5.3	6.9	8.0	10.4	12.4
“T” Through	1.4	1.8	2.3	2.7	3.5	4.1
Gate Valve	0.5	0.6	0.7	0.9	1.1	1.3
Globe Valve	23	30	39	45	58	69

CAUTION
PUMP FAILURES CAUSED BY FOREIGN MATTER IN THE OIL LINES WILL NOT BE COVERED BY WARRANTEE

6. Pressure Atomized Oil System

A pump is provided as standard with this system (Figure C-5) . It must be piped as shown in Figure D-3. There are several components that are required to complete the oil system as indicated on the schematic. The burner supplied oil pump suction should not exceed 10” hg. If a transfer pump is used to supply oil to the burner pump, the supply pressure should not exceed 3 PSIG.

The oil pump should be mounted close to the burner, so that the pressure and flow can be properly controlled.

The oil supply and return lines must be piped to the burner, with the components installed as shown in the schematic. The motor base of the oil pump should be bolted securely to

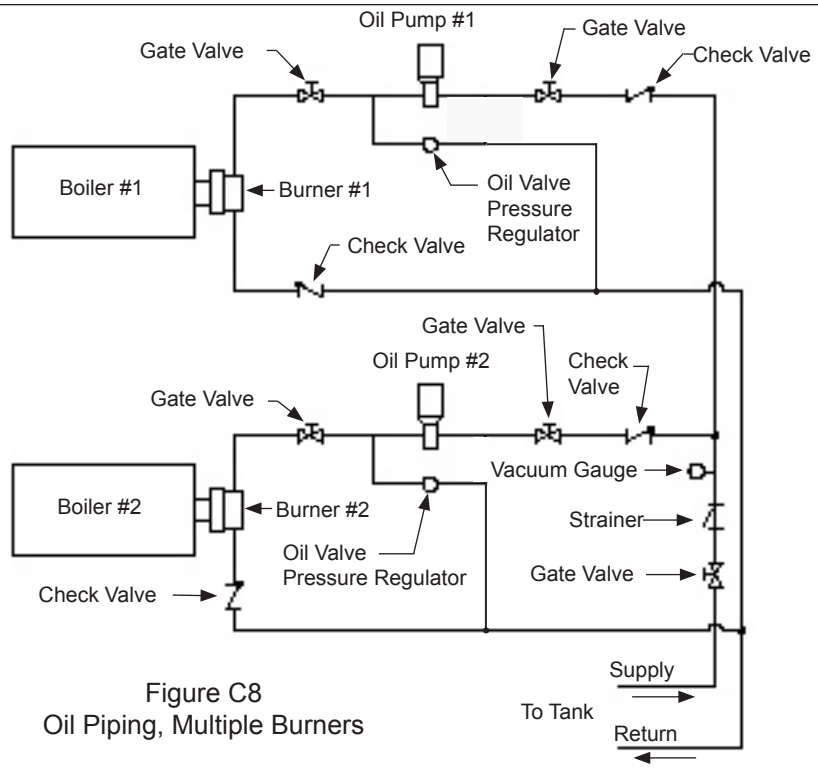

Figure C8
Oil Piping, Multiple Burners

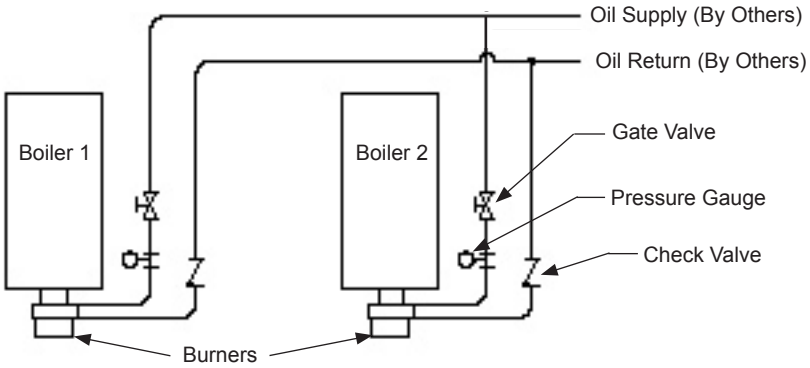

Note: No Return Line Required for #2 Oil Air Atomimized

Figure C-9
Oil Schematic, Multiple Burners with Remote Oil Pumps

the floor or some rigid base.

7. Air Atomized #2 Oil

The standard HDS air atomized burner equipped for light oil may not include the optional oil pump (Figure C-5). Oil is to be delivered to the burner at a constant 125 PSIG and with a flow capacity that is at least 50% higher than the rated nozzle capacity. For pump selections, the capacity should be 50% over the nozzle capacity. See section A for ratings.

The general arrangement for this system is shown in Figure D-4. A supply and return line connection are required, along with the components indicated. The lines must be sized correctly to provide the required flow with minimal pressure drop. The pressure in the return line should not exceed 3 PSIG.

The oil supply and return lines must be piped to the burner, with the components installed as shown in the schematic. The oil pressure regulator must be located close to the burner to provide a constant oil supply pressure.

	Equivalent Lengths of Pipe Fittings (Schedule 20/40 - use for calculating total lengths)							
Pipe diameter (in)	4”	5”	6”	8”	10”	12”	14”	16”
Mitered 90° elb or “T” side flow	21	26	32	42	52	61	71	81
Standard 90° elbow	8.7	10.8	13	17	22	26	30	35
Long rad 90° elb (rad = 8 x dia)	7.1	8.7	10	14	17	20	23	27
Mitered 45° elbow	3	6	8	10	12	14	16	18

FIGURE C-10
Equivalent Lengths of Fittings for FGR Duct

8. Gas Pilot

The typical piping arrangement for the gas pilot is shown in Figure C-4. The supply is connected upstream of the

FIGURE C-11		Pressure Drop per 100 feet of Duct (in wc)							
BHP	Max Inlet Press	4”	5”	6”	8”	10”	12”	14”	16”
Pressure drop for 60ppm NOx - Natural Gas Firing									
200	1.00	1.4	0.4	0.1					
250	1.00	2.1	0.6	0.2					
300	1.25	3.1	0.9	0.3					
350	1.25	4.2	1.2	0.5					
400	1.25	5.5	1.6	0.6					
450	1.25	7.0	2.0	0.8	0.2				
500	1.50		2.5	0.9	0.2				
550	1.50		3.0	1.1	0.2				
600	1.50		3.6	1.3	0.3				
700	1.50		4.9	1.8	0.4				
750	1.50		5.6	2.1	0.5				
800	1.50		6.4	2.4	0.5	0.2			
900	2.00		8.1	3.0	0.7	0.2			
1000	2.00			3.7	0.8	0.2			
1100	2.00			4.5	1.0	0.3			
1200	2.00			5.4	1.2	0.3			
Pressure drop for 30ppm NOx - Natural Gas Firing									
200	1.00			1.9	0.4	0.1			
250	1.00			2.9	0.6	0.2			
300	1.25			4.2	0.9	0.3			
350	1.25			5.8	1.3	0.4			
400	1.25			7.5	1.7	0.5	0.2		
450	1.25				2.1	0.6	0.3	0.1	
500	1.50				2.6	0.8	0.3	0.2	
550	1.50				3.1	0.9	0.4	0.2	
600	1.50				3.7	1.1	0.5	0.2	
700	1.50				5.1	1.5	0.7	0.3	
750	1.50				5.8	1.7	0.8	0.3	
800	1.50				6.6	2.0	0.9	0.4	
900	2.00				8.4	2.5	1.1	0.5	
1000	2.00					3.1	1.3	0.6	
1100	2.00					3.7	1.6	0.7	
1200	2.00					4.4	1.9	0.9	
Pressure drop for 20ppm NOx - Natural Gas Firing									
200	1.00			4.6	1.0	0.3			
250	1.00			7.2	1.6	0.5	0.2		
300	1.25				2.3	0.7	0.3		
350	1.25				3.1	0.9	0.4		
400	1.25				4.0	1.2	0.5	0.2	
450	1.25				5.1	1.5	0.7	0.3	
500	1.50				6.3	1.9	0.8	0.4	0.2
550	1.50				7.6	2.3	1.0	0.5	0.2
600	1.50					2.7	1.2	0.5	0.3
700	1.50					3.7	1.6	0.7	0.4
750	1.50					4.2	1.8	0.8	0.4
800	1.50					4.8	2.1	1.0	0.5
900	2.00					6.1	2.7	1.2	0.6
1000	2.00					7.5	3.3	1.5	0.8
1100	2.00						4.0	1.8	0.9
1200	2.00						4.7	2.2	1.1

first manual gas valve. This piping should be done using 1 inch schedule 40 piping.

9. FGR Duct System

If the burner is equipped with Induced Flue Gas Recirculation (IFGR), it will require a duct connection between the stack outlet of the boiler and the air inlet of the burner. FGR is used to reduce NOx emissions. There can be different levels of NOx emissions that require different quantities of flue gas and different FGR duct and valve sizes. Proper sizing and installation of the FGR duct must be done to provide the required emission control and burner performance.

The FGR control valve is already installed on the burner and the duct will connect to this point. A flange is supplied on the burner that the pipe can be welded to. Depending on the duct size required, a pipe reducer may be required to match the control valve to the duct. The control valve is usually a smaller pipe size. The FGR shutoff valve may also require a pipe reducer, depending on the duct size. Two flanges are provided on the shutoff valve to weld to the inlet and outlet pipe.

If the FGR duct is to be installed in the field, the following procedures should be used to determine the best arrangement. The process uses a “Trial and Error” sequence to evaluate different possible duct arrangements.

a. Put together a duct arrangement based on a estimated duct size.
b. Determine the equivalent total pipe length based on the arrangement and fittings used.
c. Calculate the actual pressure drop in the duct using the value in Figure C-11 for the drop per 100’ of pipe.
d. If this pressure drop is higher than the allowed drop (in Figure C-10), select a larger duct size or fittings that have a lower equivalent length and repeat the above steps.
e. If the calculated pressure drop is less than the maximum drop, that arrangement can be used.

Figure C-11 can be used to determine the equivalent duct length. Each fitting used in the duct has an equivalent straight pipe length, which is given in the chart. By adding up all of the equivalent lengths (including the length when multiple fitting are used) and all of the straight pipe lengths, the total equivalent length can be determined. This number is used to determine the pressure drop.

Figure C-10 provides pressure drop information used in sizing the FGR duct. The maximum FGR duct pressure drop is given for different inputs and NOx levels. The duct must be sized to be under this pressure. For a specific duct design, the equivalent length is used with the pressure drop per 100 feet of duct (selected from the chart, for the burner input and NOx level). The total pressure drop is:

Pressure drop = (drop per 100 feet)*(equivalent length)/100

This is the pressure drop expected from the duct that was selected. If the pressure drop is higher then the maximum allowed drop, the duct must be modified to reduce the pressure drop. This can be done by reducing the total length, using fittings with lower pressure drops or using larger pipe

sizes. The pressure drop from the FGR control valve and shutoff valve (if required) do not need to be included in this evaluation.

For example, consider the arrangement shown in Figure C-12. There will be three 90 degree elbows (close radius) and 22 feet of straight pipe. If 8” pipe is used, then the total length will be:

Length = (3 x 13) + 22 = 61 ft.

If this is a 600 BHP 30 ppm system, then the maximum duct pressure drop is 2”. The calculated drop is:

Pressure drop = 61 ft. x (3.8”/100 ft) = 2.3”

which is higher than allowed. Adjusting the pipe to 10” gives a new length of:

Length = (3 x 17) + 22 = 73 ft.

New pressure drop = 73 x (1.2”/100 ft.) = 0.9”

This pressure drop is good.
Changing to a 90 degree “T” as shown in the alternate:

Length = (2 x 17) + 52 + 22 = 108 ft.

New pressure drop is = 108 x (1.2”/100 ft)
= 1.3”

This pressure drop is still good. Note the increase pressure with the side outlet “T”. The type of fittings used often has a bigger impact on pressure drop than pipe size.

The design of the FGR duct must include the following considerations,

a. Normally the duct would connect to the stack as shown in Figure C-12, with a 45 degree cut facing the flue gas flow and with the center of the cut centered in the stack. The duct could be made to the smoke box, but must still be located with the same 45 degree cut facing the flue gas flow stream and with the center of the cut in the center of the stream.

b. The duct should be routed in a manner that has the minimum number of elbows and provides for the normal expansion and contraction of the piping. Long duct runs can change length by over 1” and can put an extreme load on the connecting points that could cause component failures. The design must include offsets that will allow for the required movement of the piping without undue force on the burner or stack.

c. Duct expansion and contraction can be managed by using two relatively long duct runs that are 90 degrees apposed to each other, similar to that shown in Figure C12. A small movement in the angle between these two legs will provide the space needed to absorb the expansion and contraction. The ends of the FGR duct must be securely attached to allow this to work properly, and prevent high loads from being applied to the burner or stack.

d. A condensation drip leg must be provided upstream of the FGR control valve and the FGR shutoff valve (if used). There must be sufficient condensate drip legs and catch space (volume of drip legs) to prevent the condensation from flowing through the control valves and into the fan. In cases of heavy condensation, a condensate drip leg may be required on the bottom of the housing, to remove condensate.

e. Determine the duct size, as indicated above. Remember that changing the fitting type and number of elbows can have a large impact on the pressure drop. If the pressure drop is too high, the unit will not make the required NOx or input due to the increased pressure drop. The burner capacity is reduced about 6% for each 1” of pressure drop.

f. Determine the location of the FGR shutoff valve (linkage systems only). It can be mounted in either the vertical or horizontal run, but it must be near the top of a vertical run to reduce the potential for condensation

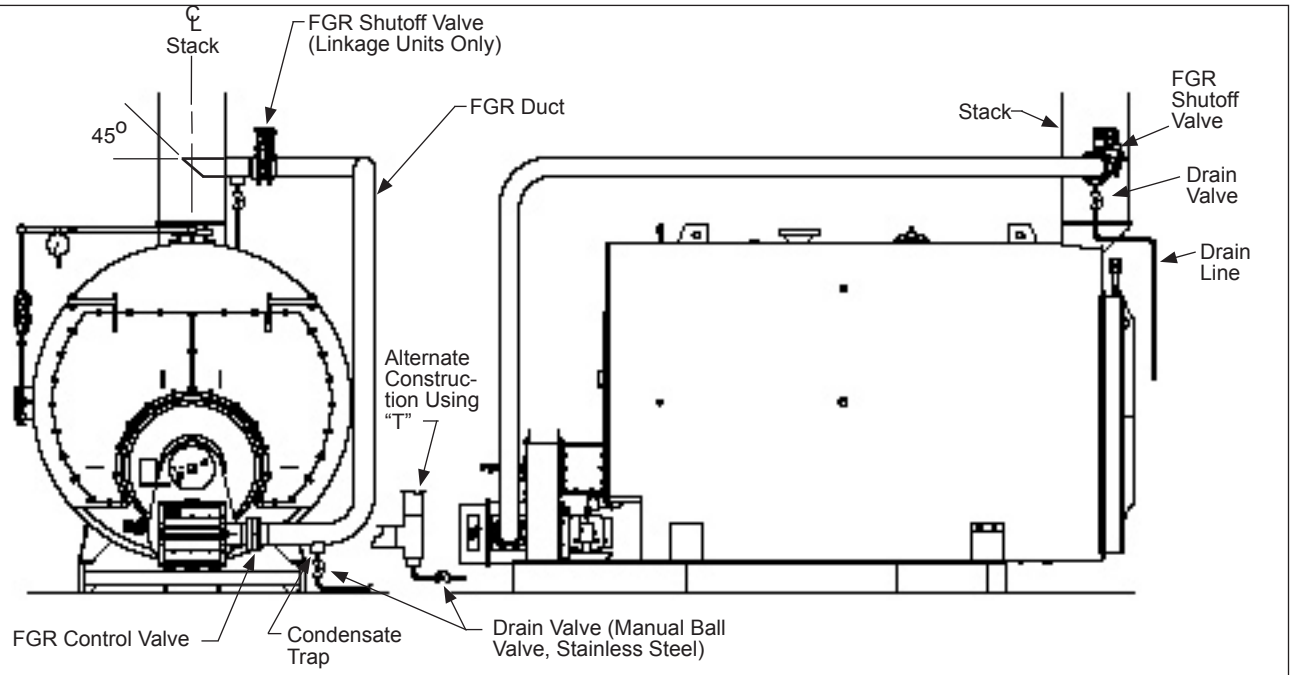

Figure C-12
FGR Duct Installation

collection. If the valve is mounted in a horizontal run, the valve shaft must be horizontal (so condensation does not collect in the bearing) and the actuator motor must be on top of the valve (with insulation between the line and drive motor). Also, there must be a condensation drip leg in the horizontal run before the shutoff valve to remove any condensation.

g. Determine if pipe reducers are needed for the connection to the FGR control valve and the FGR shutoff valve.

h. The duct must be properly supported, handling both the weight of the duct and to control the thermal expansion and contraction. The supports may need to be anchored to provide this stability in the FGR duct.

> **CAUTION**
> **UNCONTROLLED CONDENSATION CAN CAUSE PREMATURE FAILURE OF THE CONTROL VALVES, FAN AND MOTOR. ADEQUATE MEANS MUST BE PROVIDED TO REMOVE CONDENSATION FROM THE SYSTEM. COLD STARTUP WILL GENERATE SIGNIFICANT AMOUNTS OF CONDENSATION.**

i. The FGR duct is normally made from schedule 40 pipe because it is easily obtainable and inexpensive. Schedule 20 pipe can also be used for this application.

j. The duct components must be seal welded, flanged or screwed together to provide an air tight duct. Air leakage into the duct will prevent the system from working properly. It is sufficient to only inspect the welds for a proper seal, they do not need to be leak tested.

10. Draft and Stacks

Stacks and breechings must be designed to maintain a relatively constant draft at the boiler outlet without large variations. The draft at the boiler outlet should be maintained within +/- 0.1” wc. at low fire and up to +/- 0.25” at high fire, with intermediate draft proportional to firing rate. More important then the actual draft is the variation in draft at any given firing rate. For example, a tall stack or multiple units in a single stack may have different draft conditions depending on the outside temperature and the number of units running. The draft variation at any given firing rate should be controlled to within +/- 0.1” wc.

The stack should be designed to avoid wind influences from adjacent structures as well as preventing the flue products from entering inlet ducts, windows or other occupied areas. It should be of sufficient height to extend above the roof of the building or adjoining buildings to avoid down drafts in the stack or the possibility of carrying combustion gases to undesirable locations. Local codes should be checked for criteria on heights and exit velocities.

The breeching should be designed to be as straight and short as practical, to minimize pressure fluctuations. Smooth bends, gradual transitions, low velocities and tight construction are all important. Round breechings are preferred to square or rectangular ducts because they are more efficient and less likely to generate noise on the flat side due to resonance. The size should be based on a maximum velocity of 30 ft/sec. Changes in direction must be as slow as possible. Circular elbows should be of at least a four piece construction with a centerline radius that is at least double the duct diameter (use three times the duct width for square ducts). The breeching should have a slight upward elevation (about 1” per foot) towards the stack to help induce a draft. Figure A shows the total BHP that can be fired within different breeching diameters. These can be multiple boilers of different size.

> CAUTION
> OIL BURNING EQUIPMENT SHALL BE CONNECTED TO FLUES HAVING SUFFICIENT DRAFT AT ALL TIMES, TO ASSURE SAFE AND PROPER OPERATION OF THE BURNER.

The connection of the breeching to the stack or multiple boilers to a common breeching or stack must be done with care. The ducts should never be connected at a 90 degree angle, but rather a 45 degree angle where the flows will easily join each other. When connecting multiple boilers into a single breeching, the breeching size must be increased to accommodate the larger flow rates before the introduction of the added flow. These breeching size changes must be gradual, with no more then a 10 degree slope change in the duct. When multiple breechings are connected into a common stack, their locations must be staggered to prevent the flow of one breeching interfering with another.

Figure C 14
Method of Connecting Breechings and Stacks

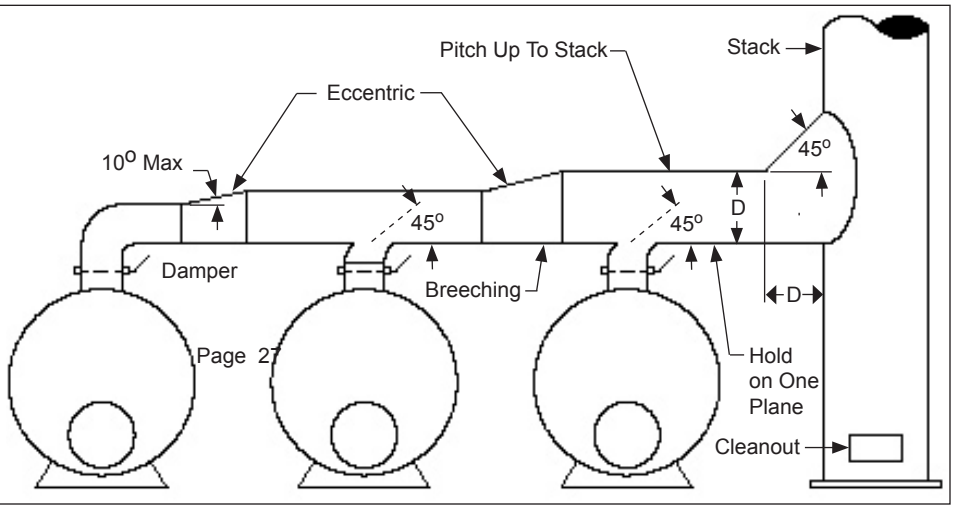

Figure C-13
Maximum BHP in a Breeching

Breeching Diameter (D)	Total BHP
16	200
18	300
20	400
22	500
24	700
26	900
28	1100
30	1400
32	1600
34	1900
36	2200
38	2500
40	2900
42	3200

Tall stacks can generate large drafts, and in fact the amount of the draft is related to the stack height. Also, systems with multiple boilers can have draft variations that are well beyond the desired level. These conditions must be corrected to allow the burner to work properly, or the draft variations will cause combustion problems. Controls can be added to compensate for this draft, and bring it back into the desired level. The barometric damper is the most common and least expensive control. Several barometric dampers can be added to provide the total correction to the system draft.

Draft controls are also available to regulate the draft by controlling an outlet damper. The speed of response is critical to allow these units to work correctly. If the draft control does not operate much quicker then the burner changes rate, the result may be large swings in draft as the control attempts to catch up with the burner. A feed forward control is the best means of performing this control. If there are large drafts due to tall buildings, special consideration must be given to the type of damper needed to regulate this draft, and the response of the control to maintain the proper draft.

11. Electrical System

The burner is supplied as standard, with a remote control panel. The panel is either intended for floor or wall mounting. The proper location will allow the operator to see the burner operate while manning the controls. In some areas, there are local regulations that define where the control panel must be mounted in relation to the vessel.

The control panel must be securely attached to either the floor or the wall. This should include lag bolts into the floor or wall.

The wiring diagram for the specific job should be followed for the connections to the panels and external equipment. The National Electric Code, Canadian Electrical Code, Part 1 or similar code for other jurisdictions should be followed.

The following list covers the standard acronyms used on wiring diagrams:

AUX. – Auxiliary
CB – Circuit Breaker
C.C.W. – Counter Clock-Wise
C.W. – Clock-Wise
CR( ) – Control Relay
FGR – Flue Gas Recirculation
FTS – Fuel Transfer Switch
GND – Ground terminal
H.W.C.O. – High Water Cut Off
INT – Interlock
L – 120V line
L.F.H. – Low Fire Hold switch
L.W.C.O. – Low Water Cut Off
MR – Manual Reset
N. – 120 V Nuetral
N.C. – Normally Closed
N.O. – Normally Open
P.L.F.S. – Proven Low Fire Start
P.O.C.S. – Proof Of Closure Switch
SW. – Switch
TDR – Time Delay Relay

D. Fuel and Electrical Systems

1. Gas Systems
2. Gas Pilot
3. Pressure Atomized Oil
4. Air Atomized #2 Oil
5. Fuel-Air-Ratio Controls
6. Electrical Controls
7. Operating and Modulating Controls
8. Flame Safeguards

The burner can be equipped with a wide variety of fuel and operating systems to control the fuel, air, modulation and safety. This section describes how these systems operate and their common components.

Each of the applicable systems must be completely understood prior to operating any equipment. In addition to the basic principles defined here, the component details and specific combination of components on your specific unit must be fully studied and understood. The fuel diagrams, wiring diagram, component manuals and bill of materials for the unit must be included in the study.

1. Gas Systems

All gas fuel systems have a common group of components, including the pressure regulator, shutoff valves, gas control valve and pressure switches. In addition, some systems use a vent valve, pressure switches and proof of closure switches. The type and location of these components can vary with the different applicable regulations, insurance and component supplier.

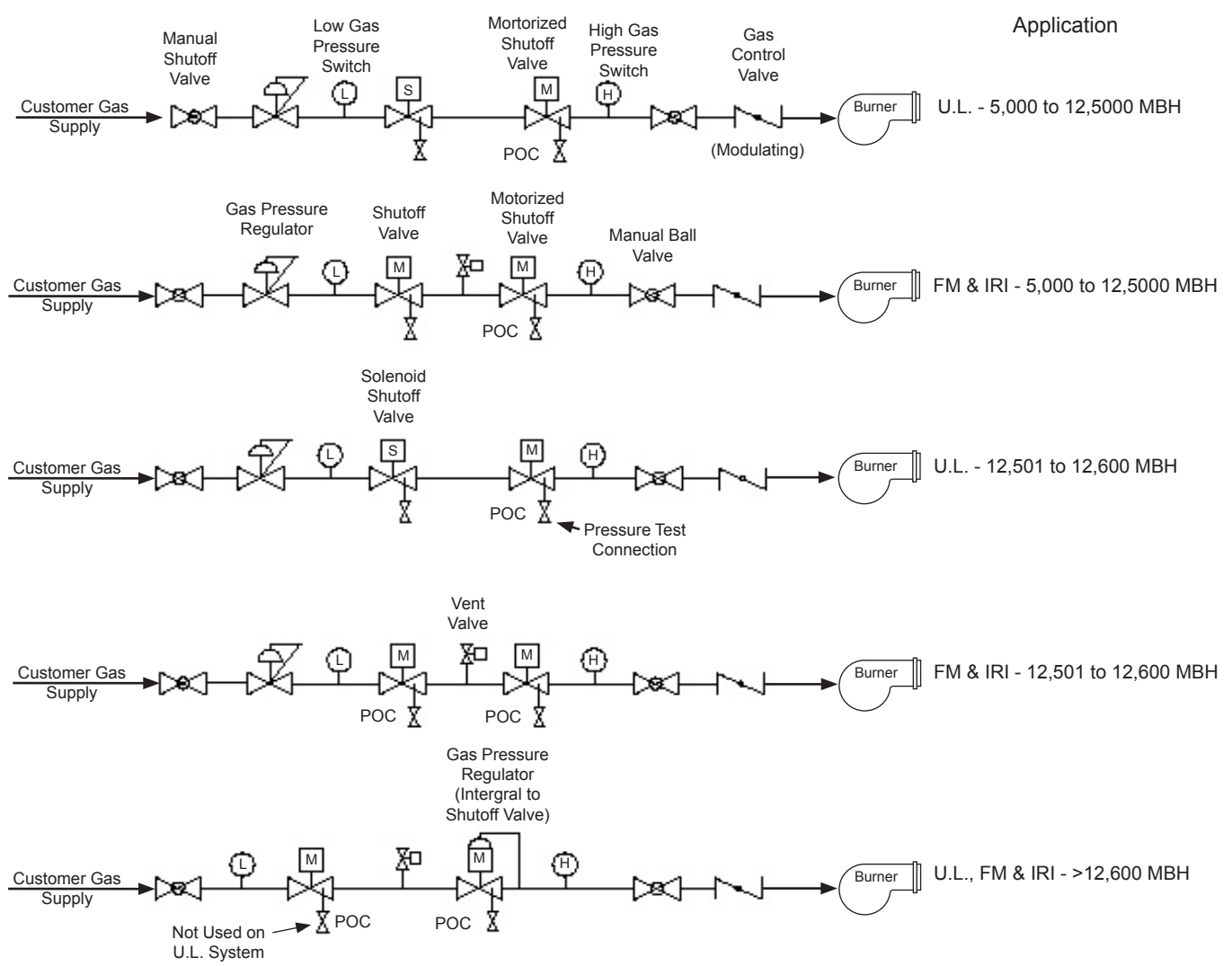

Figure D-1
Typical Gas Train Arrangements

Figure D-1 shows the common gas trains arrangements used on the HDS burner line. There may be other local or job site requirements that can alter the components in addition to those outlined in this summary.

All gas and oil systems for the HDS burner are full modulating. The two gas safety shutoff valves are either motorized or solenoid type and are controlled by the flame safeguard to provide safe control of the fuel flow.

The gas control valve is a butterfly valve used to control the flow of gas from the low fire to the high fire input. The

butterfly valve is driven by a fuel cam (linkage system) or a direct coupled actuator. There are different types of gas control valves used, which may use mechanical low fire stops and/or may be internally ported as a smaller size. High turndown burners will require smaller valves with higher pressure drops to provide adequate control at low fire.

A vent valve is provided in some applications to allow gas that may leak past the first valve to escape to a safe point of discharge. **Vent valves are not used on propane fuels that are heavier than air or fuels that could be toxic.**

A gas pressure regulator is used to provide a constant supply pressure to the gas train and butterfly control valve. This constant pressure through a variable orifice in the gas control valve obtains consistent gas flow rates. The regulator must be capable of operating through the full range of flows and pressure with consistent and steady pressures. The regulator may be located upstream of the safety shutoff valves or integral with the second safety shutoff valve.

The high and low gas pressure switches are used to detect an improper gas pressure situation and will prevent the burner from firing under these conditions. The low gas pressure switch is located near the supply of gas to the gas train, to detect a loss of supply pressure. The high gas pressure switch is located before the metering valve to detect a surge in pressure to the burner.

The gas train is designed to work with the pressure available at the job site. This supply pressure generally refers to the pressure available at the entrance to the gas train, which is the pressure supplied to the gas trains shown in Figure D-1. The supply pressure may vary depending on the operation of the unit, in which case a minimum and maximum pressure are needed to define the supply pressure. The maximum pressure is the static pressure, or the pressure in the line when there is no flow. The leading components of the gas train are selected to operate up to these pressures. The minimum, or dynamic pressure is that pressure available when the unit is operating a full rate, or the reduced pressure due to the flow in the line. The gas train is sized to this pressure, so that it can deliver the required flow to the burner with this available pressure. The job site supply pressures must be consistent with the pressures listed on the burner material list.

The regulated gas pressure is that pressure required to overcome the pressure drops in the piping, firing head and furnace pressure to deliver the required flow at high fire. Usually, one of the first steps in setting up gas combustion is to adjust the regulator to get rated capacity. This regulator is usually at the beginning of the train, but in some cases, it can be integral to the second shutoff valve. The pressure drops and regulated pressures will be different in these two designs.

The manual valves are provided to lock out the fuel flow during off times and during initial startup checkout. They provide an added level of safety and can simplify maintenance.

The gas piping can play a critical role in the operation of the system. Throughout the system, the piping must carry the required flow without significant loss of pressure. If the drop is too high, there may not be enough pressure to operate the burner a full capacity. This is especially true between the gas train and the burner, where the pressure is lowest. The piping between the train and burner should have a minimum number of elbows and / or turns to prevent high pressure drops.

2. Gas Pilot

Figure D-2 show the typical gas pilot systems. Like the gas trains above, they have the common components of a pressure regulator and shutoff valve. The gas line connects upstream of the gas pressure regulator in the gas train.

The gas pilot is positioned behind the diffuser, with the pilot flame passing through the diffuser. The flame must be large enough to pass in front of the scanner tube for the Flame Safeguard to detect the pilot flame and allow the burner to start. This also insures that there is sufficient pilot flame to ignite the main fuel.

The gas pilot can operate with either natural gas or propane. Different internal orifices are used to regulate the

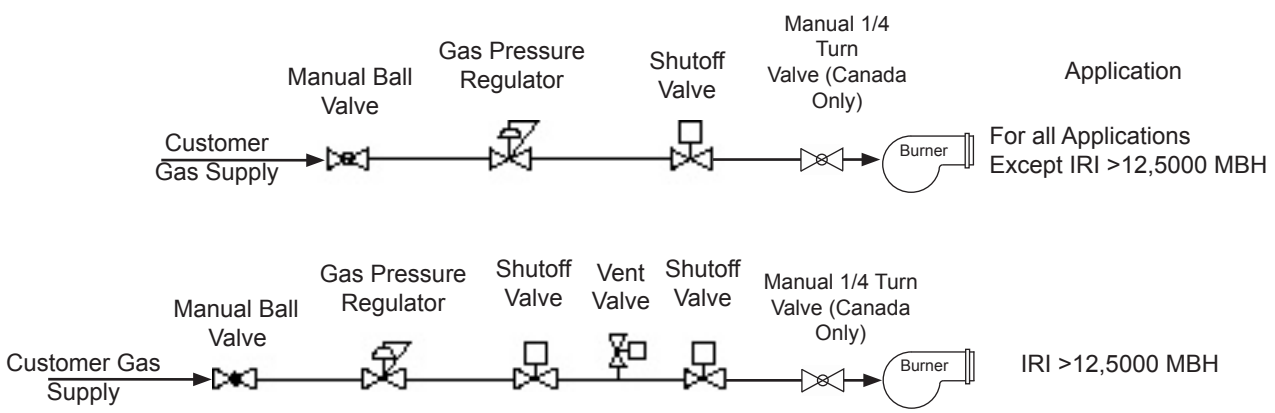

Figure D-2
Gas Pilot Train Arrangements

gas flow and maintain the same pilot size with the two different fuels.

3. Pressure Atomized Oil System

Figure D-3 shows a schematic of a pressure atomized return nozzle oil system. This system uses pressure atomizing oil nozzles that have a built in return flow path. When oil is allowed to flow in the return path, the flow through the nozzle is reduced, and this is used to modulate from low to high fire.

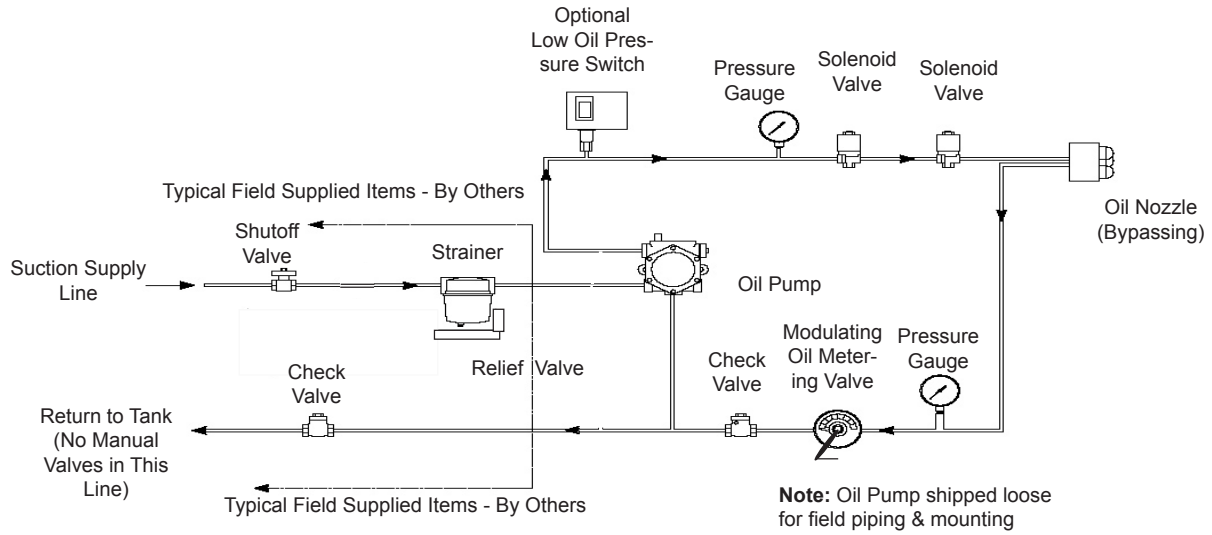

Figure D-3
Pressure Atomized Oil Schematic

A standard oil pump provides oil at a pressure of about 300 psi to the nozzle. At high fire, the bypass is closed or nearly closed and all of the pressure is available to the oil nozzle for maximum flow. As the burner modulates to low fire, the oil metering valve is opened, causing some oil to flow through the metering valve and to the return line. As the metering valve continues to open, more oil is bypassed and the flow through the nozzle continues to drop. At high fire, the pressure in the return line is about 150 psi. At low fire, this pressure drops to about 65 psi. Reducing the pressure too low can result in poor atomization and a smoky fire, which limits the turndown to about 3:1 to 4:1. On standard linkage systems, with combination gas, the gas turndown will be about the same as the oil turndown, based on the air damper positions. Optional multi-point modulation motors or parallel positioning systems can be used to improve the turndown of gas firing on a combination burner.

The oil pump is supplied as a separate assembly that includes the pump, backpressure regulator, motor, coupling, interconnecting housing and motor (Figure B-16). An optional gauge may also be provided. The motor starter for the pump is included in the control panel.

The safety shutoff valves determine if the burner is allowed to fire on oil, as controlled by the flame safeguard system. These valves are the solenoid type except units over 89 GHP with FM or IRI insurance, where the valves are motorized with POC (Proof of Closure) switches to prove closed position prior to allowing the unit to operate.

The low oil pressure switch is used to prove sufficient oil supply to the burner. It is adjusted to a pressure that is below the minimum pressure expected at that location in the system.

Two check valves are provided in the system downstream of the nozzles to prevent the possible reverse flow of oil from the return line. One valve is located in the oil gun and the other is located on the burner piping.

A strainer, manual valve and second check valve should be installed in the field piping to allow proper operation of the system (Figure D-3).

4. Air Atomizing #2 Oil

An air atomizing system uses compressed air to atomize the oil. The oil pump and oil pressure regulating valve are optional and may be provided by others.

Figure D-4 shows a schematic of the air atomizing #2 oil system. The oil nozzle has two inputs, oil and air. Oil is supplied to the system at 125 PSIG. An optional remote pump assembly may be used, or it can be provided by other systems. In either case, a backpressure regulator is required to provide a constant pressure to the system.

The oil metering valve regulates the flow of oil to the nozzle and is used to vary the oil flow rate from low to high fire. Modulation is obtained by a fuel cam (linkage system) or by a direct drive actuator.

An air compressor is used to supply air for atomization. The air compressor is provided as a separate assembly and is field piped to the burner. The compressor should be located as close as possible to the burner to prevent loss of airflow. Also, the piping should be done to minimize the use of elbows and turns that result in pressure loss. The following chart should be used to determine the minimum size (Figure D-5).

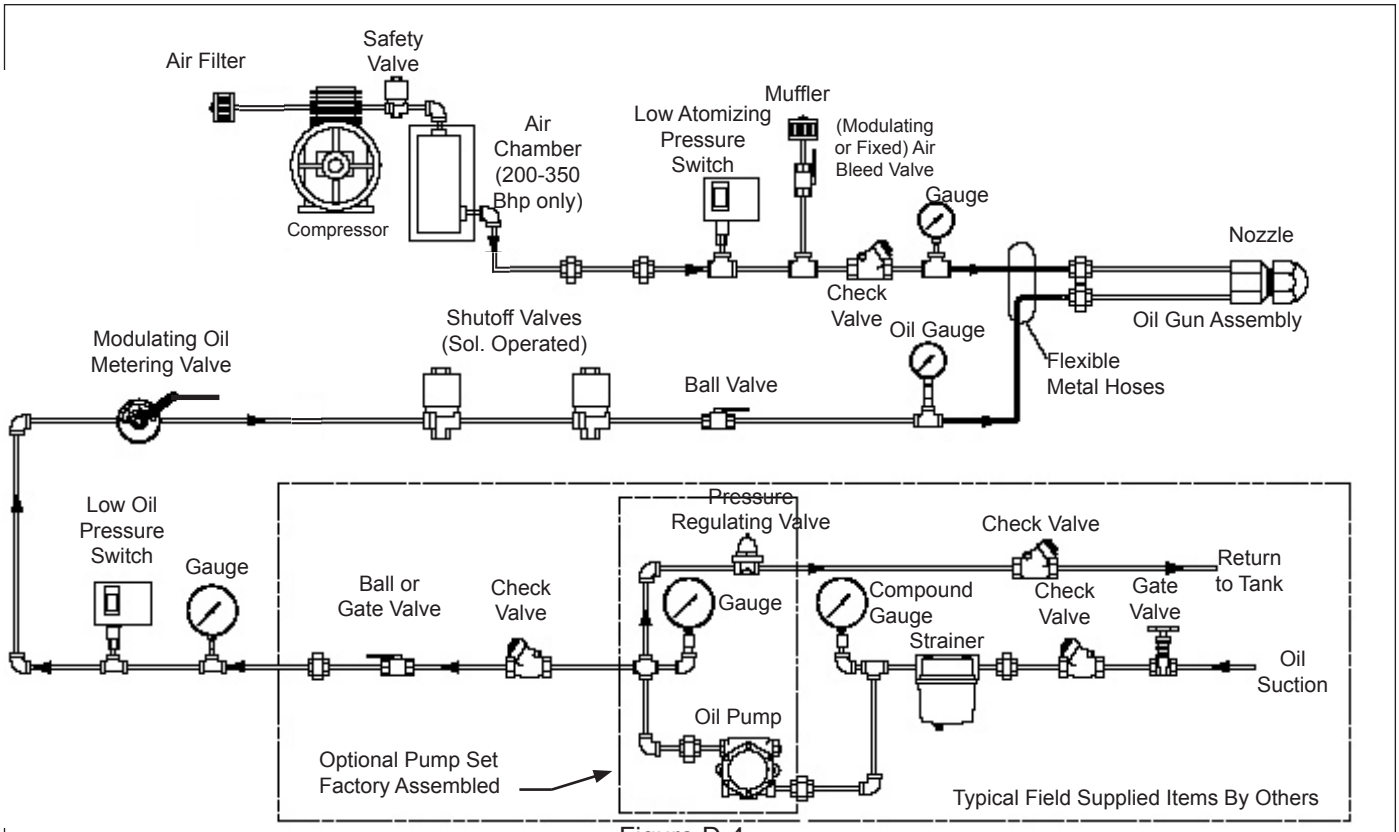

Figure D-4
Air Atomizing Light Oil Schematic

Atomizing Air Line Minimum Pipe Size		
	Piping Length (feet)	
Boiler HP	0 - 100 feet	100 - 200 feet
200 - 350	1 inch	1 1/4 inch
400 - 600	1 1/2 inch	2 inch
600 - 1200	1 1/2 inch	2 inch

Figure D-5 Air Atomizing Pipe Size

The atomizing airflow rate is regulated by the bleed valve, which can bleed off the excess air not required for good atomization. In some systems, especially with lower turndown rates, the bleed valve is set manually and does not vary. In other systems, especially with higher turndowns, the bleed valve is modulated with firing rate, by connection to the jackshaft or by a direct drive actuator.

5. Fuel-Air-Ratio Controls

All HDS burners are full modulation. That means that they can modulate from a lower input to a higher input, based on a measured need for more or less input. The system that adjusts the fuel and air flow is called fuel-air-ratio controls and is covered in this section.

For proper operation, the rate of fuel and air flow must be closely matched for clean and efficient combustion. Too little combustion air and not all of the fuel will be burned, wasting fuel and increasing emissions. Too much air and the energy is wasted in heating this excess air to a relatively high stack temperature.

There are two common types of fuel-air-ratio controls, single point positioning (linkage) and parallel positioning (linkageless). The linkage system uses mechanical shafts and connection links to physically tie the air and fuel control valves together. A modulating motor is used to modulate the valves from low to high fire by providing a 90 degree rotation that matches the firing rate required (see section 8). A long shaft, called the jackshaft is used to distribute this 90 degree rotation to each valve. Linkage arms are connected from the jackshaft to the valve. By adjusting the positioning of the linkage, the air and fuel valves can be set to match each other. A fuel cam is used to provide some improved flexibility in adjusting the intermediate fuel rates, to match the air damper settings. If the unit has FGR, the FGR control valve will be tied together with the other valves to provide the correct flow at each firing rate.

The linkageless system uses independent electric actuators for each fuel, air and FGR valve. These are driven by a controller, which is programmed to set the correct position of each valve at multiple firing rates. The linkageless system offers more flexibility in adjusting the valves, including low and high fire positions and different FGR rates for each fuel.

An optional multiple position modulation motor can be used on a linkage system to provide different low and high fire settings for the different fuels, expanding the turndown capabilities of individual fuels.

6. Electrical Controls

The burner is provided with a junction box on the burner and free standing control panel as standard. An integral control panel is provided as an option. The unit specific wiring diagram shows the wiring details of all these components, including the interconnecting wiring that may be

required in the field. The motor starters for the oil pump and air compressor (if provided) are also included inside the control panel.

In some cases, the burner wiring diagram shows the interconnection of all the vessel safety and operating controls, like the low water cutoff. In other cases, these are shown on a separate diagram supplied by the vessel manufacturer. In all cases, these controls must be integrated together.

7. Operating and Modulating Control

Burner operation, for on-off cycling and modulation are controlled by the boiler steam pressure or hot water temperature variation from set point. Parallel positioning systems generally use sensors to measure temperature or pressure and are programmed in a unique method, not covered in this manual. Refer to the control manual, provided with the burner, for complete details on setting the controls.

The standard equipment will include a high limit control, an operating control and a modulating control (not normally supplied with the burner). All of these controls are piped to the steam or hot water piping connected to the vessel. These three controls must be adjusted to function together or the burner will operate inefficiently and provide poor system response. If excessive on-off cycling occurs, the components will wear out prematurely. Figure D-8 shows the relationship between the temperature or pressure and burner firing rates.

The high limit control senses the hot water temperature (vessel outlet) or steam pressure. It is used as a safety limit to turn the burner off if the operating control fails. If this limit is tripped, the burner will remain off and will have to be manually reset. The high limit control should be set sufficiently above the operating control (pressure or temperature) to avoid nuisance shutdowns. The high limit control cannot be set above the temperature rating of the vessel or connected piping. This point is indicated on the far right of Figure D-8 and represents the highest temperature or pressure available.

The Operating Control senses the temperature or pressure and automatically turns the burner on to initiate the startup sequence when the temperature or pressure drops below the “Burner On” point (“B” on Figure D-8) and initiates the shut down sequence when the load is satisfied and the temperature or pressure rises above the “Burner Off” point (“A” on Figure D-8).

The modulating control senses the temperature or pressure and signals the modulating motor to set the fuel and air input rates at a level consistent with the indicated temperature or pressure. An increasing load will cause the temperature or pressure to drop and the modulating motor will sense this lower level and increase the fuel and air input accordingly, starting modulation from low fire at point “C” and arriving at high fire at point “D” (Figure D-8). This control must be set to allow normal shutdown at low fire.

As Figure D-8 shows, there should be clear separation between each of the control points for the system to work properly. If the controls are positioned too close to each other, or even overlapping, the burner will have excessive ON-OFF cycling that reduces efficiency, increases wear and can cause premature failure of the components. Standard burner motors in the HDS size range should not cycle on and off any more than 2 to 4 times per hour.

8. Flame Safeguards

Several different FSG (Flame Safeguards) are offered for the HDS. They all perform the common function of controlling the process of pre-purge, pilot trial for ignition, main trial for ignition and flame safety as well as monitoring limit switches and sensors. The actual details of operation can vary. The manual for the specific FSG is included with the burner and should be studied carefully prior to installation, startup or operation.

The operating sequence, especially the sequence of when the limit switches are checked, will be an important tool in troubleshooting the burner.

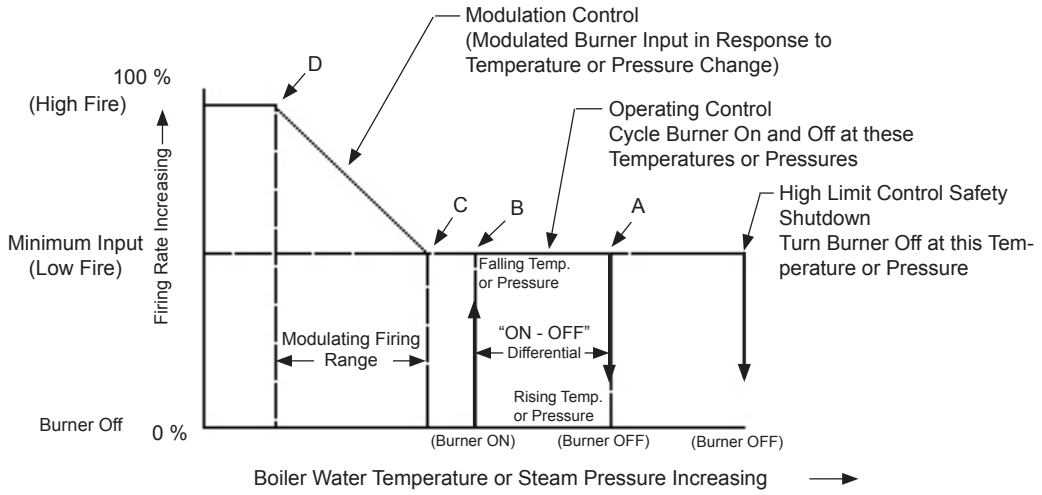

Figure D-8
Operating and Modulating Control

E. PRELIMINARY ADJUSTMENTS

1. Visual Inspection
2. Burner drawer checkout
3. Motor Rotation
4. Fuel, FGR and Air Control
5. Fuel Cam Adjustment
6. Air Damper Adjustments
7. Pilot and Scanner Adjustments
8. Gas Train Adjustments
9. Oil Train Adjustments
10. Air Proving Switch Adjustments
11. Operating and Modulating Controls

The burner is adjusted at the factory to fire into a test vessel. There may be significant differences in the furnace size, furnace pressure, air density, fuel properties and other conditions that must be covered by field adjustments and combustion testing. In addition, several checks and adjustments are required prior to startup. This section covers these preliminary checks and adjustments.

WARNING
ADJUSTMENTS DEFINED IN THIS SECTION ARE ONLY INTENDED TO COVER THE INITIAL BURNER STARTUP. FINAL ADJUSTMENTS AS DEFINED IN SECTION F MUST BE DONE TO PROVIDE THE FULL SAFETY OF THE SYSTEM. FAILURE TO PROPERLY ADJUST THE CONTROLS COULD RESULT IN INJURY OR DEATH.

CAUTION
BURNER ADJUSTMENTS SHOULD ONLY BE PERFORMED BY TECHICIANS TRAINED AND EXPERIENCED IN THIS WORK. FAILURE TO USE PROPERLY TRAINED AND EXPERIENCED TECHNICIANS COULD RESULT IN EQUIPMENT DAMAGE, PERSONNEL INJURY OR DEATH

1. Visual Inspection

The shipment and installation of the burner can result in loose connections, bent arms and other changes. The burner should be visually inspected for any unusual conditions before operating.

- All wiring connections are tight. Test pulls on wire show them to be tight.
- All fuel lines are tight.
- Burner is mounted to vessel and floor, with all bolts secured.
- The linkage and cams are tight.
- The linkages, cams and valve acuators are aligned and have not been bent during installation.
- The air damper, FGR line and control valves are tight.
- The oil lines are tight.

2. Burner Drawer Checkout

The access cover on the head extension should be removed to inspect the burner drawer assembly and mounting to insure that all components are secure and in their proper position. Figure E-1 shows the location of the components in the burner drawer. Some components can be adjusted to improve combustion and can operate through a range of dimensions. Other components, like the pilot, must be in their identified position to work properly.

The burner is adjusted at the factory with initial settings for this application. These settings may be different than the initial values in the chart, these positions are based on test firing and should be used.

The burner drawer must be inspected to insure that the components have not shifted or come loose during transit

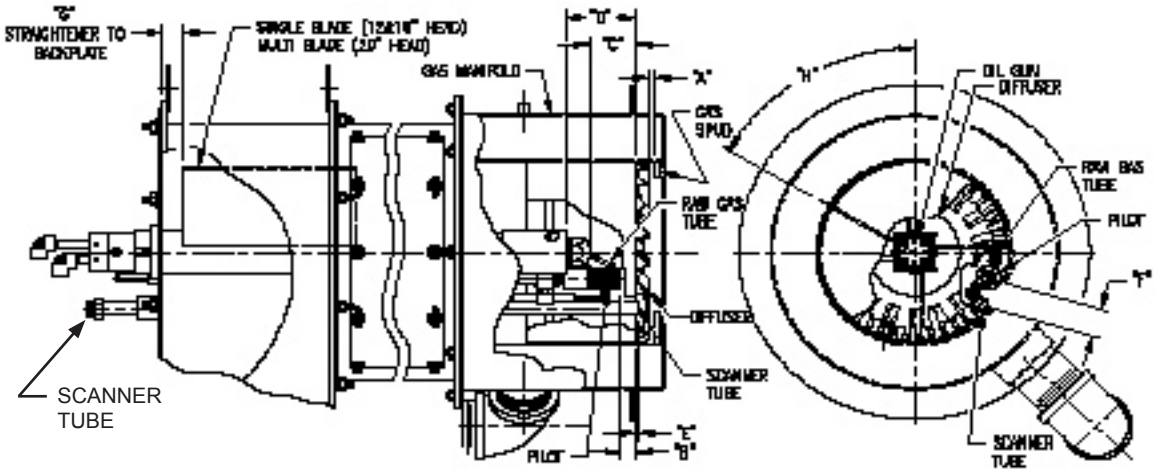

Figure E-1
Burner Drawer Setup

(See Figure E-2 for Dimensions)

or installation. The burner drawer access cover must be removed to perform this inspection. The following is a list of checks that should be done.

- The scanner tube should go through the diffuser and extend about 1/8” past the diffuser. (Dim. E)
- The diffuser should not be crooked and must have the same spacing to the gas spuds throughout its circumference.
- The pilot should be about 1” behind the diffuser, adjacent to the scanner tube, so that the pilot flame will flow in front of the scanner. (Dim. B)
- The ceramic blanket must be in position between the front of the gas housing and the refractory, all the way around.
- The air straightener blade should be tightly held in position. (Dim G & H)
- The word “TOP” should appear on the top of the oil gun, on the outside of the backplate.

3. Motor Rotation

The combustion air fan and pump motors must be checked for proper rotation. The motors can be momentarily powered by pressing the mechanical actuator on the starter. This should be done with a wood block for insulation value.

The combustion air fan rotation is marked with an arrow on the windbox. The rotation can be observed within the motor to verify correct rotation, or if this is not accessible, the burner drawer can be removed to directly observe the fan. The oil pump has a slot between the motor and pump where the rotation can be observed. An arrow on the pump shows the correct rotation. The direct drive air compresssor can rotate in either direction, but belt driven compressor must rotate as the arrow indicates

4. Fuel, FGR and Air Control

The fuel and air valves have initial positions set at the factory. Differences in air density, fuel properties and supply pressure will require tuning of the burner. The initial positions of the air damper, FGR valve, gas valve and oil valve should be adequate for initial startup, but must be checked so that movement did not occur during shipment or installation. If this is a linkage burner, the linkage should be adjusted to allow for modulation from low to high fire, with each valve opening 45 to 90 degrees. This should be checked by one of the two methods below.

Honeywell Brand Modulation Motor:
The modulating motor can be operated by removing the cover, and removing the yellow wire to drive the motor to the high fire position. Connecting the yellow wire will cause the motor to drive to low fire position. This is a low voltage (24 VAC) wire that can be handled safely, however, care must be used as high voltage is also present.

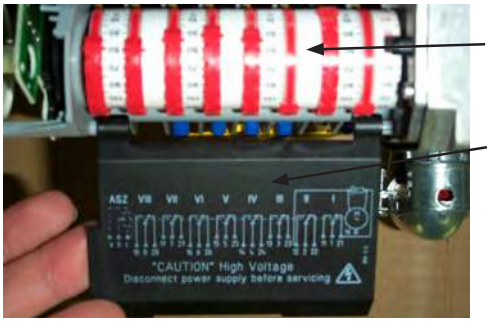

Adusting Wheel Matches Adjacent Circuit

Circuit Designation Shown on Wiring Diagram

Figure E-3 Multiple Setpoint Modulation Motor (Landis)

Landis Brand Modulation Motor:
This motor has multiple set points, one for gas and one for oil. Removing the cover will expose a manual/auto switch that will allow the motor to be cycled manually to check the linkage and valve positions.

CAUTION
IN MANUAL POSITION, END STOPS DO NOT LIMIT TRAVEL ON THE MULTIPLE SET POINT MODULATION MOTOR. MONITOR AND DECREASE TRAVEL IF THE VALVES APPROACH FULL TRAVEL TO PROTECT THE VALVES FROM DAMAGE.

Figure E-3 shows the internal settings of the multiposition modulation motor. Each adjustable cam setting is related to an elecetrical connection (or circuit in motor). These circuit numbers are listed on the wiring diagram so that the low and high points of each fuel are identified. These would be adjusted independently to obtain the input rates. The valves and linkage should operate smoothly without strain or jerky actions. If this occurs, check for binding linkage and rod ends that are not within their range of motion and readjust as required.

	12” Head		16” Head		
Dim	Initial	Range	Initial	Range	Description
A	1”	1/4 “- 1 1/2”	1”	1/4” - 1 1/2”	Diffuser fin to gas spud
B	1/2”	No Adjust	1”	No Adust	Pilot to diffuser
C	1”	0 - 2”	1 1/2”’	0 - 2 1/2”	Oil nozzle to difusser
D	3”	*	3”	*	Diffuser to gun tube
E	1/8”	No Adust	1/8”	No Adjust	Scanner tube to diffuser
F	2 1/2”	No Adjust	2 1/2”	No Adjust	Pilot to scanner tube
G	1 1/2”	0 - 3”	1 1/2”	0 - 3”	Backplate to air straightner
H	30°	Any Angle	30°	Any Angle	Straightner angle from vertical
* Must be behind nozzle tip and hold diffuser clamp					

Figure E-2 Burner Drawer Setup Dimensions

(See Figure E-1 for “Dim”)

If the burner is equipped with FGR, the FGR valve will modulate with the fuel and air valves and it should travel from the near closed low fire position to a position that is about 45 to 90 degrees open at high fire. Dual fuel units can have additional controls, preventing or limiting FGR from flowing during oil firing. Some FGR units (designed for 30 ppm gas) will be equipped with a potentiometer in the control panel that will allow the shut-off valve to partially open and allows a small amount of FGR to flow when firing oil. This keeps the oil input close to the gas input (lowering the FGR rate increases the combustion air rate). The oil combustion is generally better when some FGR is used at low rates thus NOx level will be reduced.
On combination fuel, linkage burners with FGR, the shut-off FGR valve may require adjustment for oil firing. If the gas NOx level is 60 ppm, no adjustment is needed and both fuels will operate with he same FGR setting.

5. Fuel Cam Adjustments

The fuel cam needs to be checked for correct travel and alignment. Positions can change during shipment and installation and they must be reviewed prior to startup. The fuel cams are mounted to the ends of the jackshaft assembly. A cam follower link follows the profile established by the adjusting screws and drives the fuel valve. A thin metal band is used between the screw and cam follower to provide a smooth profile. The adjusting screws are backed by compressed nylon inserts, which provide a resistance to turning.

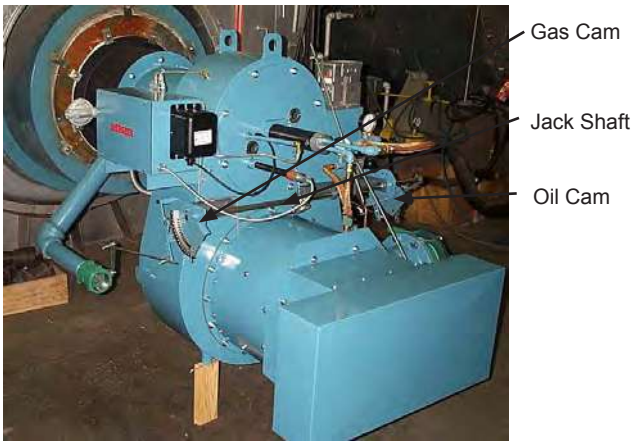

Figure E-7 Typical Linkage

The cam (Figure E-5) should be checked for the following conditions:

a. At the low fire position, the roller should be between the first two adjusting screws. If not, adjust the position of the cam accordingly, making sure to maintain the same low fire fuel valve position.

b. When the linkage is modulated from low to high fire, the roller must stay in the center of the adjusting screws within 1/8". If needed, the two cam set screws can be loosened and the cam moved to center it on the roller.

c. At high fire, the roller should be between the last two adjusting screws.

d. The adjusting screws should form a smooth contour with no jumps between the screws.

e. In preparation of startup, the retention plate can be removed temporarily to make it easier to adjust the screws.

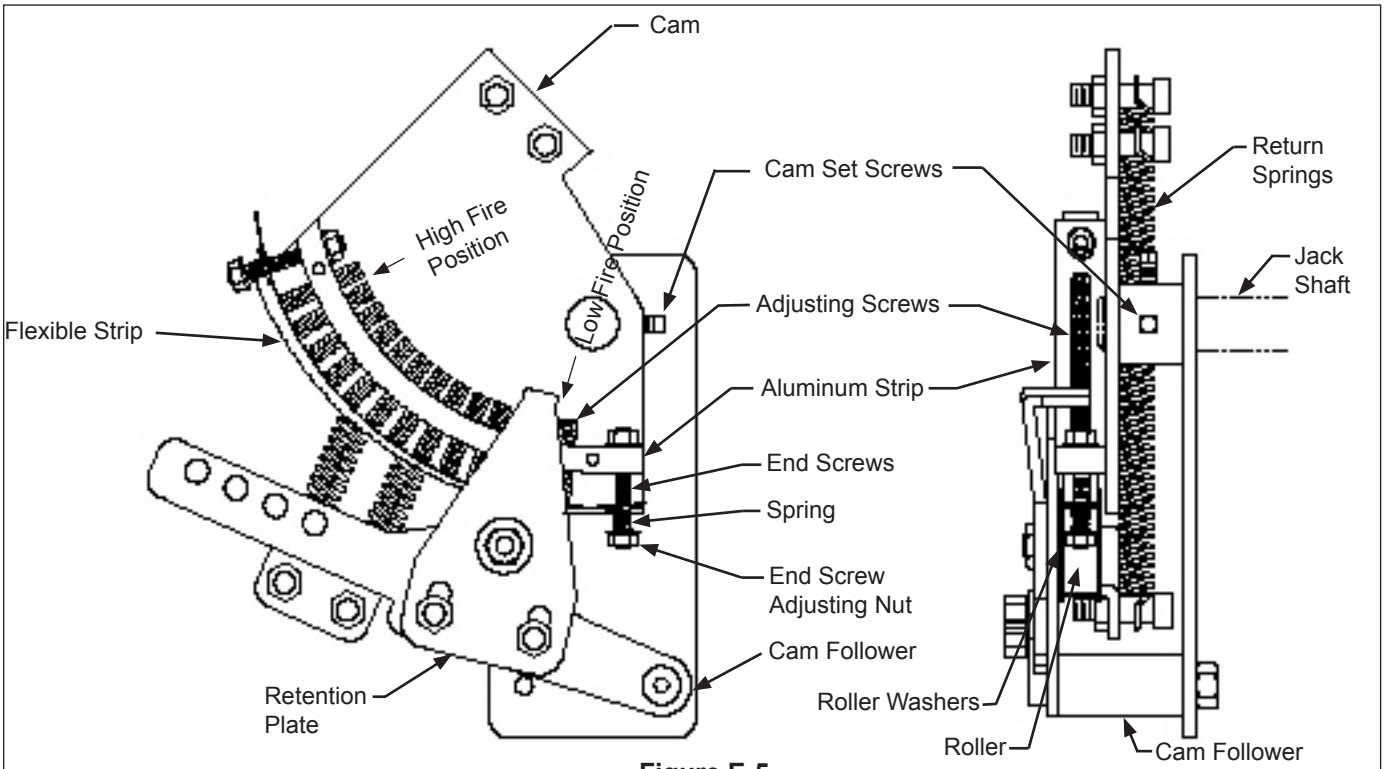

Figure E-5
Fuel Cam Adjustment

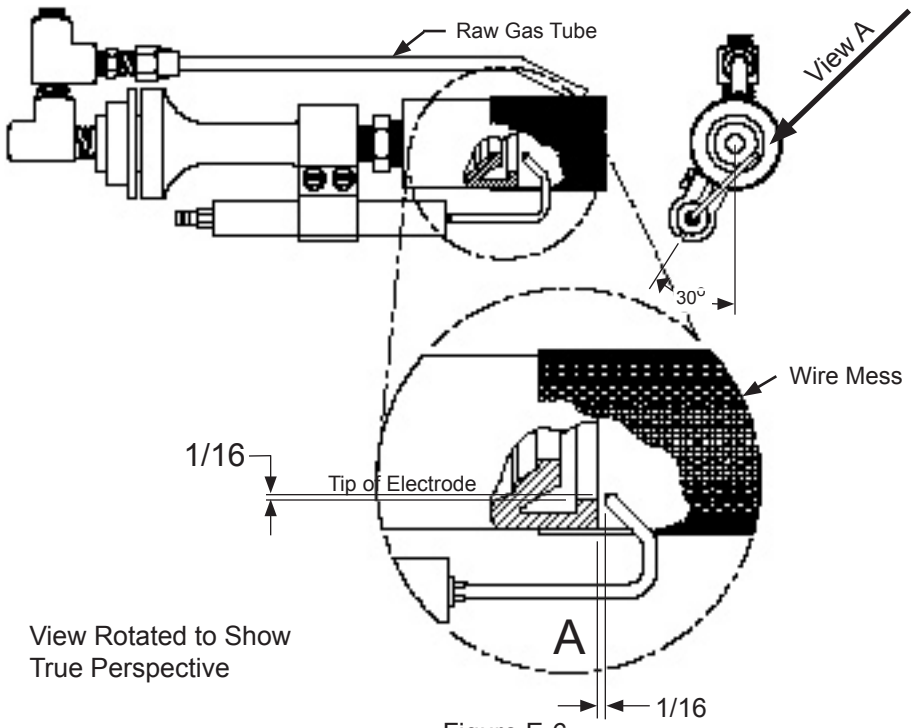

Figure E-6
Pilot Assembly

THE RETENTION PLATE MUST BE REPLACED WHEN SETUP IS COMPLETE.

If the unit is equipped with a parallel positioning system (linkageless), the control valves can be positioned and operated in a similar manner, but accomplished through the controller. Refer to the instruction manual for details.

CAUTION

LINKAGE AND ACTUATOR MOUNTINGS CAN BE BENT OR MOVED DURING SHIPMENT AND INSTALLATION. THEY MUST BE CHECKED PRIOR TO OPERATION AND ANY FAULTS CORRECTED. FAILURE TO CORRECT A MISALIGNED CONTROL WILL RESULT IN PREMATURE FAILURE.

6. Air Damper Adjustments

Low fire is set at the factory to an approximate position (usually about 5° to 10° from vertical position). Turndown and low fire air requirements will dictate actual position. A high turndown burner will have a very small gap at low fire (1/16") while a normal turndown could have gaps of 1/8" to 1/4". High fire position is typically 30° to 60° open, depending on the application. The combustion settings will determine final position.

The single blade air damper has several adjustments that can be made to improve the low fire air control if required for high turndown (> 6:1 turndown). The upper and lower block plates can be adjusted to provide a tight fit up. There is also an adjustment plate on each end of the damper to eliminate the end clearance gap. These should all be set at the factory and should not require adjustment in the field. If some movement has occurred, or the low fire air cannot be turned down enough, these adjustments can be changed to provide a better fit with smaller gaps for improved air turndown.

Linkage adjustments are done as with any other equipment. Both dampers are configured with a slow opening profile, so that the change in airflow from low fire is more gradual than a typical air damper. Extreme linkage setups that attempt to slow the damper opening off of low fire are not required. A low fire stop is provided on the single damper to fix the low fire position with linkage controls.

7. Pilot and Scanner Set Up

The pilot assembly is located on the end of a gas pipe that is inserted through the burner drawer assembly. A bracket mounted to the guide tube is used to hold the pilot end in the correct position. A collar and setscrew are used to lock the gas pipe in position on the back plate.

The pilot should be located as shown in Figure E-1. Figure E-6 shows the component dimensions of the pilot. The pilot can be adjusted while operating, to obtain the best flame position.

The gas pilot regulator should be adjusted for a gas pressure of 5 – 8 inches WC (Figure E-8).

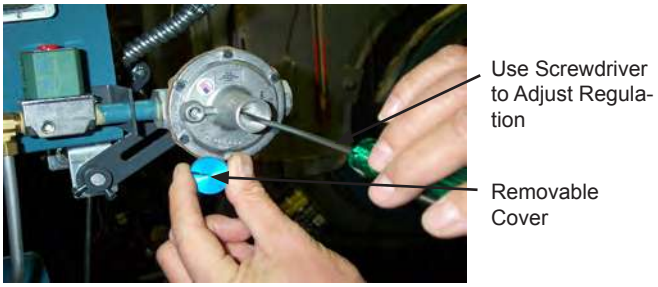

Figure E – 8 Gas Pilot Regulator Adjustment

The scanner is mounted to a tube that is inserted through the burner drawer back plate and through a hole in the diffuser. The scanner sight tube should extend about 1/8" past the diffuser. This position ensures that the scanner only sees the actual flame, and not a spark or other false signals.

8. Gas System Adjustments

The gas pressure regulator should be set to the required gas pressure. If this value is not known, a value of approximately 50% over the high fire gas manifold pressure (given on burner nameplate) can be used for the initial setting. It will be adjusted at startup to obtain the rated capacity during setup (Figure E-9).

Figure E – 9
Main Gas Pressure Regulator Adjustment

The low gas pressure switch (if provided) should be set for an initial value of 50% below the lowest expected gas pressure. The high gas pressure switch (if provided) should be initially set at 50% above the highest valve expected at that point. See section B for location of switches (Figure E-10).

Figure E – 10 Gas Pressure Switch Adjustment

9. Oil System Adjustments

The oil pressure supply to the burner should be set for 300 PSIG if pressure atomizing and 125 PSIG if air atomizing. The oil pressure regulator is adjusted by removing the cap and turning the regulator screw clockwise (cw) to increase pressure and counterclockwise (ccw) to decrease pressure. The low oil pressure switch (Figure E-12) should be set for a pressure of about 25 PSIG lower than the regulated pressure (Figure E-12).

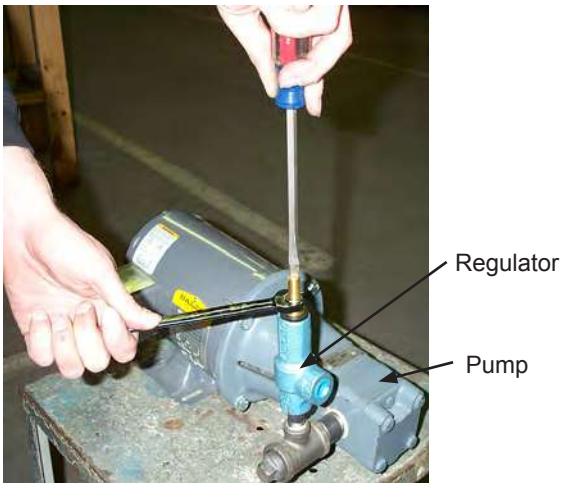

Figure E – 11 Oil Pressure Regulator Adjustment

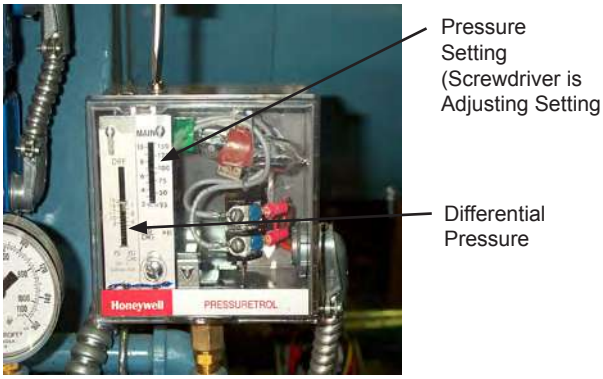

Figure E - 12 Low Oil and Atomizing Air Pressure Switches

10. Air Proving Switch

The air proving switch has been adjusted at the factory for an initial setting. If this switch trips during initial startup, turn the adjustment screw ccw two full turns to reduce the trip pressure setting (Figure E-13).

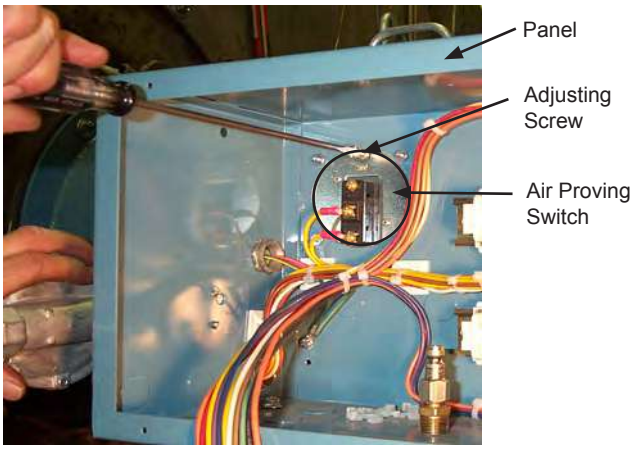

Figure E - 13 Air Proving Switch Adjustment

11. Operating and Modulating Controls

The operating controls will not be used during the burner setup, except that the high limit and operating controls can cycle the burner off and should be set for the highest allowable pressure for the application.

The high limit control should be set at the maximum temperature or pressure allowed for the boiler vessel or piping. The operating control should be set at a high enough pressure to prevent this control from turning the burner off unless the operating temperature or pressure is at the maximum value. The modulating control should be set at a value below the operating control to prevent the unit from modulating immediately after starting.

F. STARTUP and OPERATING ADJUSTMENTS

1. Pre-start Checkout
2. Linkage Adjustments
3. Fuel Cam Adjustments
4. FGR Adjustment
5. Burner Drawer Adjustments
6. Single Fuel Setups
7. Combination Gas and Pressure Atomized Oil
8. Combination Gas and Air Atomized #2 Oil
9. Gas Setup
10. Pressure Atomized Oil Setup
11. Air Atomized #2 Oil Setup
12. Operating Control Adjustments
13. Limit Tests
14. Pilot Test
15. Burner Shutdown
16. Restarting After Extended Shutdown

This section covers the startup and operating adjustments of the Webster Models HDS and HDSX burners.

WARNING
BURNER STARTUP, COMBUSTION ADJUSTMENTS AND LIMIT CONTROLS ADJUSTMENTS SHOULD ONLY BE PERFORMED BY TRAINED AND EXPERIENCED SERVICE TECHNICIANS. ATTEMPTING TO PERFORM THESE FUNCTIONS WITHOUT THE PROPER TRAINING AND EXPERIENCE CAN RESULT IN EQUIPMENT DAMAGE, PERSONAL INJURY OR DEATH.

Before proceeding with the startup and adjustment, be sure that the overall installation is complete. Review the boiler operating and installation manual, as well as all control manuals to verify that all equipment is ready for operation. These manuals must be read and understood prior to starting the equipment.

If you are not qualified to service this equipment, DO NOT TAMPER WITH THE UNIT OR CONTROLS - CALL YOUR SERVICEMAN.

At the conclusion of the startup,document valve and linkage positions, pressures and settings for future reference.

READ AND SAVE THESE INSTRUCTIONS FOR FUTURE REFERENCE.

1. Pre-Start Check List

Before starting the burner, a complete review of the installation, wiring and piping of the burner, boiler and all supporting equipment must be complete and all of these items must be ready for operation prior to starting. The following is a general review:

_____All wiring is connected. Test pulls on wire show them to be tight.
_____All fuel lines are connected and tight.
_____Pilot gas is connected.
_____Burner is mounted to vessel and floor, with all bolts secured.
_____The linkage is correct (in low fire position) and tight.
_____The stack is connected and routed to the outside. Draft controls are installed and operational.
_____Gas vent lines are connected and routed to the outside.
_____Do not start the unit unless all cleanout doors are in place and secured.
_____The vessel is completely installed, filled with water and operating controls checked.
_____Support equipment is in place and ready (feed pumps, draft controls, steam/hot water systems, boiler limits and controls and feedwater systems).
_____A load must be available for the burner startup and adjustment process. The burner must be operated at high rates for extended periods of time and the load must be capable of using this energy.
_____A combustion analyzer with O2 and CO (for gas) must be available to tune combustion. A smoke spot tester must be available for oil firing. If this is a low NOx burner, a NOx analyzer must be available. All of these analyzers must be recently calibrated and able to provide accurate readings.
_____Other test equipment, including manometers, gauges and volt meter shall be available.
_____Manometer or guage on the gas manifold.
_____Manometer or guage before and after gas pressure regulator.
_____Draft guage or manometer (at stack outlet).
_____Draft guage or manometer for furnace pressure.

2. Linkage Adjustments

Adjusting the air damper and FGR control valve on a linkage system requires an understanding of linkage setups. The rate of change for the fuel valve, air damper and FGR valve must be matched by how the linkage is setup. If the air damper or FGR valve opens too quickly, the flame may become unstable or the NOx levels may not meet the requirements. There are a few general guidelines that should be followed in setting up the linkage of a burner,

a. The linkage must provide the correct stroke of the valve, from low to high fire. Increasing the length of the drive crank arm (B) or decreasing the length of the driven crank arm (C) will increase the valve travel. To reduce valve travel, decrease B or increase C (Figure F-1).

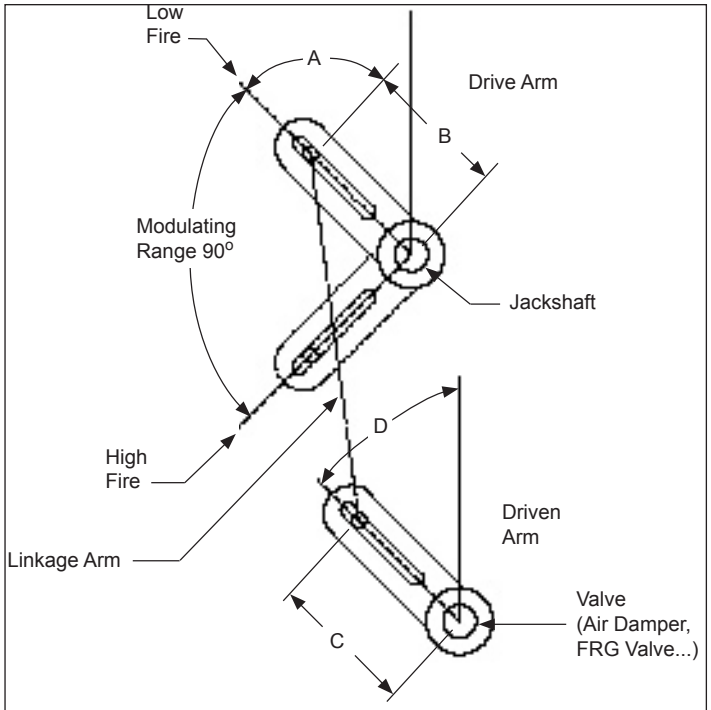

Dim	Smaller	Larger
Angle A	Slower LF driven arm travel (D)	Faster LF driven arm travel (D)
Length B	Reduce driven arm travel (D)	Increase driven arm travel (D)
Length C	Increase driven arm travel (D)	Reduce driven arm travel (D)

Figure F-1
Linkage Adjustments

b. Decreasing the angle of the drive arm will slow the initial valve travel (and speed up the travel at high fire). This would be done to get the air damper to match the fuel valve action.

3. Fuel Cam Adjustments

The cam is used to adjust the intermediate fuel rate with the low and high fire settings done by the linkage connections. The intermediate rates can be adjusted by turning the adjusting screws in the clockwise direction to increase fuel input and decrease the % O2 level in the flue gases. Turning the adjustment screws counterclockwise will decrease fuel input and increase % O2 in the flue gases.

The following guidelines should be used for adjusting the cam:

a. When adjusting the screws, the adjacent screws must also be adjusted to provide a smooth contour from screw to screw. When complete, the flexible strip between the adjusting screws and the roller must come in contact with each screw, providing a smooth transition from low fire to high fire.

b. The end screws (or nuts) can be adjusted to hold the strip against the screws, but should not deform the strip.

c. There should be no upsets in the profile, where the flexible strip is required to move to a screw position where it is initially not in contact with the screw. Also, the movement from one screw to the next cannot be too large (more then 1/8”). This will cause the strip to flex and will lead to premature failure of the strip.

d. The adjusting screws have a limited range of adjustment. They can be turned in until they are flush with the aluminum bar and adjusted out until the side washers of the roller contact the aluminum bar.

e. If any adjusting screw does not turn with some resistance, the cam must be replaced.

f. When the cam adjustment is complete, the retention plate must be installed. The retention plate will help insure that the fuel valve position will not get far from its ideal position, even with interference or sticky valve operation.

WARNING

IF THE CAM ADJUSTING SCREWS DO NOT HAVE RESISTANCE TO TURNING, THE CAM SHOULD BE REPLACED, AS THE SCREWS MAY CHANGE POSITION. FAILURE TO CHANGE A DEFECTIVE CAM MAY RESULT IN INJURY OR DEATH.

CAUTION

LARGE CHANGES FROM ONE ADJUSTING SCREW TO ANOTHER WILL RESULT IN PREMATURE FAILURE OF THE CAM AND MAY PREVENT THE BURNER FROM OPERATING PROPERLY.

g. If the contour has a sharp rise in the cam screw profile, trying to open the valve very quickly in the first few screws, the linkage should be readjusted to cause the air damper to open slower (make the jackshaft drive arm more parallel to the linkage rod). Likewise, the opposite contour can be corrected by speeding up the air damper drive (Figure F-1). The final cam screw profile should be close to the profile of the cam with no abrupt changes.

4. FGR Adjustments

Flue gas is recirculated back into the burner to reduce the flame temperature, which reduces the NOx level. High quantities of flue gas result in lower NOx levels, but can also result in flame instability if there is too much FGR. Natural gas fuel can handle larger quantities of flue gas than oil and can have much lower NOx levels as a result. Generally, the NOx levels only apply to gas firing and oil firing is not adjusted for NOx levels. There may be exceptions to this, and the orders details should be reviewed to identify any special combustion requirements.

Dual fuel units may need additional adjustments and compensation to handle the different FGR rates between natural gas and #2 fuel oil. Units that require gas NOx levels above about 45 ppm can operate with the same quantity of FGR on both fuels and no additional controls or adjustments are needed. Burners

equipped with Posi-Control can be adjusted for individual air and FGR settings on both fuels and can easily handle these variations, even with lower NOx levels. Linkage burners operating at 30 ppm NOx (natural gas) are equipped with a potentiometer in the control panel that will allow the shut-off valve to partially open and allows a small amount of FGR to flow when firing oil. This keeps the oil inputs close to the gas input (lower FGR rates increases the combustion air rate). The oil combustion is generally better when FGR is used at low rates resulting is a lower NOx level. Linkage levels with NOx levels under 30 ppm will also use a multiple modulation motor to provide separate gas and oil low fire andhigh fire positions.

Linkage dual fuel units may also be equipped with the optional multiple set point (Landis) modulation motor in addition to the above potentiometer. This motor allows for different low and high fire settings on gas vs oil to obtain the correct airflow for each fuel and optimize the turndown on gas.

The quantity of recirculated flue gas can be adjusted with the inlet tube on the FGR line. To reduce the quantity of FGR, push the tube into the FGR line (loosen the two set screws to adjust the position of the tube, and tighten when done). Moving the tube into the air stream will increase the quantity of FGR. An access cover is provided opposite the FGR line for this adjustment.

On a dual fuel unit, the natural gas should be done first to properly set the FGR inlet tube. Once gas is setup, oil can be set.

For dual fuel linkage systems, the following guidelines should be used:

- A 60 ppm system can be adjusted with the same FGR rate on both fuels. The FGR control valve is set on gas and oil follows that setting.
- A 30 ppm system uses the FGR limiting potentiometer (located in the control panel) to obtain a partial flow of FGR when firing oil. The FGR control valve is set when firing gas. The FGR limiting potentiometer is adjusted to improve combustion but not cause instability. The combustion needs to be checked at several firing rates.
- Under 30 ppm, separate gas and oil operating pointsare established in the modulating motor. Parallel positioning (linkageless) systems allow all of the valves to be positioned independently for each fuel. For this reason, the setup sequence can be more flexible.

5. Burner Drawer Adjustments

The burner drawer has several adjustments built into the design that allow the combustion to be tuned during operation. While this can simplify the combustion tunng process, care must be used to retain the relative position of other components during this sequence. If these adjustments are required, follow the sequence listed to perform the adjustments.

Before any adjustments are made, the position of each component must be marked. A felt tip pen or a combination of masking tape and another type of pen can be used.

NOTE: There is no external air straightner tube on the 20 inch head (identified with the letter “C” in the model number).

- Mark the angle position of the straightner tube (Dim. H, Figure E-1) and measure its distance out from the backside to the end of the tube (Dim. A, Figure F-2).
- Mark the distance of the oil gun tube from the backplate.
- Mark the distance of the scanner to the backplate (Dim C, Figure F-2).
- Mark the distance of the gas pilot line to the backplate (Dim D, Figure F-2).

a. To adjust the air straightner position, (not available on the 20 inch head). This is usually done to improve low fire flame shape, to obtain more uniform flame appearance.

- Loosen the two set screws located on the square boss welded to the backplate.
- Loosen the two setscrews in the straightner, locking the straightner to the oil gun tube.
- Adjust the straightner tube, moving in, out or rotate the tube to obtain the best combustion.
- Tighten the four screws from the above steps.

b. To adjust the diffuser to gas spud dimension:

- Measure the dimension from the backplate to the end of the oil gun tube. This dimension, along with the intial position measured in figure F-2 will determine the limit of the adjustment. For example, if the diffuser is 1 inch behind the diffuser, then it can be adjusted in 3/4 inch or out 1/2 inch to stay within the limits of 1/4 inch to 1 1/2 inch diffuser to gas spud dimension.
- Loosen the two setscrews locking the straightner tube to the oil gun tube.
- Loosen the two setscrews locking scanner tube to the backplate. Move the scanner in the maximum amount adjustment, (3/4 inch in our example) and temporarily lock in place.
- Loosen the two setscrews locking the pilot gas line to the backplate. Pull the pilot out the maximum amount allowed in the diffuser movement (1/2 inch in our example).
- Adjust the diffuser by moving the oil gun tube in and out the amount determined above. Do not rotate the tube or the alignment of the components could be upset. When the best position is found, lock into place with the two setscrews on the air straightner tube.
- Determine the change in the diffuser position and move the scanner and gas pilot line to the same relative point. For example, if the new diffuser position is 1/2 inch in from the original setting, then the pilot and scanner tube would each be positioned 1/2 inch closer to the backplate to maintain their same relationship to the diffuser.
- Tighten the setscrews on the pilot line and scanner tube.

c. To adjust the oil nozzle to diffuser position:

- Lossen the two setscrews locking the oil gun lines to the aluninum end cap of the oil gun.
- Adjust the oil nozzle to obtain the best combustion.
- Watch for spray back on the diffuser when the gun is

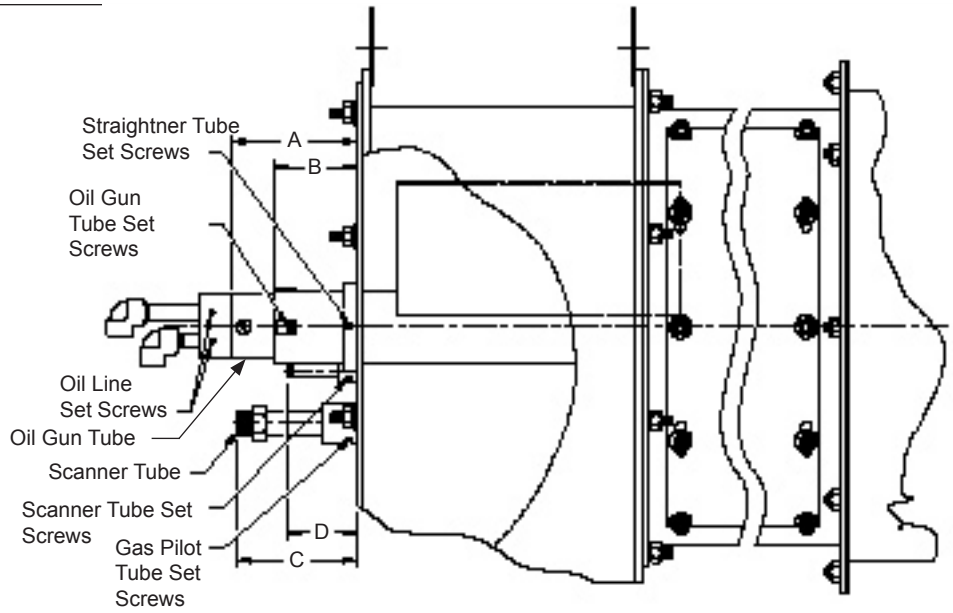

Figure F-2
Drawer Assembly Adjusments

pulled too far back. The flame may appear good but carbon will quickly develop on the diffuser.

• Tighten the two setscrews on the oil tubes locking it into position.

If the burner drawer needs to be removed for better access to components, follow the following steps:

a. Disconnect the scanner by screwing it off of the scanner tube. In some cases, the scanner simply pulls out, with a spring tension. Secure the scanner so that it is protected from shock.
b. Disconnect the gas pilot line. Move the pilot line so the drawer can be pulled out without interference.
c. If equipped with oil, disconnect the oil lines, and move them out of the way to allow the drawer to be pulled.
d. Disconnect the ignition cable from the transformer. It is attached with a thumb screw nut.
e. Loosen and remove the nuts on the burner drawer.
f. Pull the drawer out, holding the drawer centered in the opening to prevent it from hanging up while being pulled out.
g. Set the drawer down horizontally, do not set it on the diffuser as it may flatten some fins or change positions.

To re-install the burner drawer, simply work the procedure in reverse.

6. Single Fuel Setups

Single fuel burners can be adjusted following the procedures outlined in Section 10 for gas firing; Section 11 for pressure atomized oil and Section 12 for Air atomized #2 oil.

The procedures for each of the systems (linkage, cams, FGR) must be completely understood and followed as part of the setup process.

7. Combination Gas and Pressure Atomized Oil

Combination burners, firing both gas and oil, require some compromises in the setup because they share common controls for both fuels. In this case, linkage units must have the gas input adjusted to match the oil inputs because there is little flexibility in adjusting the oil rates. Oil will be setup first and will set the air damper positions to support the low and high fire oil inputs. Follow the procedure outlined in section 11 to complete the oil setup. Then setup the gas input as defined in section 10, using the air damper positions defined by oil, and adjusting the gas input to match the air damper settings.

If the burner is equipped with an optional multiple setpoint modulating motor or parallel postioning, the low and high fire rates, as well as lightoff rates, can be set independently for each fuel. In this case, the gas is adjusted first, to set the air damper locations for gas firing, as defined in Section 10. Once gas is set, oil is setup as defined in Section 11, except that the multipoint modulating damper motor is adjusted to bring the low fire air setting to match the oil needs.

There are several different options available that can alter the exact setup details, and these must be evaluated prior to startup so that the procedures can be adjusted accordingly. The procedures given are for linkage systems. Parallel positioning (linkageless) systems allow for much more flexibility in the fuel, air and FGR settings on each fuel, and can be tuned to better match each fuels needs. The setup details for linkageless controls will follow the same general sequence, but differ in specifics for setting the valve positions.

8. Combination Gas and Air Atomized #2 Oil

Combination burners, firing both gas and oil, require some compromises in the setup because they share common controls for both fuels. Air atomized #2 oil firing can have turndowns and air damper positions very

similar to gas firing, simplifying the setup. If the burner is equipped with FGR, gas must be started first to set the FGR control valve positions to obtain the correct NOx performance. If there is no FGR, either fuel can be started first, however the setup cannot be finalized until both fuels have been reviewed to determine the air damper positions. Follow the setup procedures defined in Section 10 for gas setup and Section 12 for air atomized oil setup.

If the burner is equipped with an optional multiple set-point modulating motor, the low and high fire rates, as well as lightoff rates, can be set independently for each fuel. In this case, the gas is adjusted first, to set the air damper locations for gas firing, as defined in Section 10. Once gas is set, oil is setup as defined in Section 12, except that the multipoint modulating damper motor is adjusted to bring the low fire air setting to match the oil needs.

There are several different options available that can alter the exact setup details, and these must be evaluated prior to startup so that the procedures can be adjusted accordingly. The procedures given are for linkage systems. Parallel positioning (linkageless) systems allow for much more flexibility in the fuel, air and FGR settings on each fuel, and can be tuned to better match each fuels needs. The setup details for linkageless controls will follow the same general sequence, but differ in specifics for setting the valve positions.

9. Gas Setup

a. Place the burner switch in the “OFF” position
b. Place the “Auto-Manual” switch in the manual position. If this is a combination fuel burner, make sure the fuel selector switch is on “GAS”.
c. Place the manual flame control potentiometer in the MIN (low fire) position
d. Close the downstream manual shutoff valve (closest to the modulating valve) on the gas train.
e. Turn the electrical power on for the burner, boiler and related components.
f. Verify that the gas metering valve is nearly closed, the vent valve (if equipped) is operating and the gas pilot valve is not open (the solenoid will hum and feel warm).
g. If equipped with FGR, verify that the FGR control valve is in the near closed position. A linkage system should have the shutoff FGR valve in the closed position.
h. Turn the burner switch on. This will start the blower motor and initiate the prepurge cycle.
i. When the prepurge sequence is complete and the low fire start switch is made, the pilot valve will open and the pilot flame should be visible through the sight port.
j. When the pilot flame is established, the flame safeguard will energize the main gas valve (indicated with the Fuel Valve Light). This operation of the main fuel valves must be visually checked by observing the valve stem operation.
k. After the timer has completed the trial for main flame, the burner will go out on alarm (the closed manual gas valve prevented the burner from lighting). At this time, the gas valves must be visually checked to verify that they have closed. This test sequence proves the proper operation of the primary control.
l. Press the reset button and restart the burner. When the pilot has started, open the manual gas valve to allow the main flame to start.
m. If equipped with FGR, the shutoff FGR valve should open on a linkage system, after the main flame has been proven. The timing can be adjusted with the time delay inside the control panel, so that the FGR shutoff valve opens as soon as the main flame is established. The control valve of the linkageless system should move from closed to a low flow position after proving main flame.
NOTE: If the burner is not operating as indicated, follow the troubleshooting guide steps to determine the problem and corrections required.
n. After a few seconds, the combustion analyzer should have an accurate reading of the O2 in the stack. Figure F-3 shows the typical range of O2 at different firing rates, and the burner should be adjusted to be within this range. Rough settings for low and mid fire combustion settings are adequate at this time. Once the high fire is set, the other settings can be fine tuned.
• Turning the cam screw in will add fuel, making it richer and reducing the O2 level.
• Turning the cam screw out will reduce the fuel input, increasing the O2 level.
If equipped with FGR, the NOx level should be close to the desired NOx, as required by the specific order. The FGR valve can be opened to decrease the NOx level, or closed to increase the NOx level.
o. Operate the burner until the boiler is warmed up, and near the operating pressure or temperature. Increase the firing rate, using the manual potentiometer, while monitoring and adjusting the O2 level. Adjust the gas pressure regulator as needed to reach the high fire input.
p. If equipped with FGR, adjust the FGR valve as needed to obtain the approximate NOx level.
q. Adjust the high fire input to match the maximum input listed on the rating label. At high fire, the gas butterfly valve should be at least 50 degree open (more if available gas pressure is low), and the gas pressure regulator adjusted to obtain the rating. The input should be measured using the following equation:

Calculating Natural Gas Input

Gas MBH =
HHV x [(Patm + Pgas)/29.92] x [520/(Tgas +460)] x [measured ft3/sec] x [3600 sec/hr]

Where:
MBH = 1000’s of BTU/M input
HHV = Higher heating value of gas, BTU/cubic feet
Patm = Atmospheric pressure in inches Hg
Pgas = Gas pressure before gas meter in inches Hg (inches HG = PSIG x 2.04)
Tgas = Gas temperature at the flow meter, in degrees F
Measured ft3 = volume of gas measured by meter
sec = Time for measured ft3 to flow through meter

Note: Some gas meters require a 6 inch wc correction to Pgas. Consult your meter calibration data.

Figure F-3
O2 levels

	Natural Gas With FGR		Natural Gas No FGR		Oil	
% Rate	Min % O2	Max % O2	Min %O2	Max %O2	Min %O2	Max %O2
8	5.0	9.0	7.0	13	NA	NA
10	5.0	9.0	5.5	12	6.0	10.0
15	4.0	8.0	4.5	10	5.0	9.0
20	3.0	8.0	3.5	9	4.0	8.0
30	2.0	7.0	3.0	8	3.5	7.5
40	2.0	7.0	2.5	7	3.0	7.0
50	2.0	6.0	2.5	6	3.0	7.0
100	2.0	6.0	2.5	6	3.0	6.5

NOTE: The listed manifold pressure is only an approximate value and can vary with operating conditions and normal tolerances. The fuel flow rate must be measured to obtain an accurate input value.

r. Adjust the air damper to obtain the correct O2 level.
s. If equipped with FGR, adjust the NOx level to be about 10% below any guaranteed NOx performance. A balance of the FGR control valve and air damper are required to obtain the final result, as each can impact the other. If the FGR valve does not travel at least 50 degrees, the FGR inlet tube should be readjusted (pushed into the FGR pipe).
t. Modulate the burner to low fire, adjusting the O2 level as the burner modulates.
u. Adjust the low fire input, using the fuel cam and air damper adjustments. The linkage may need to be readjusted to obtain the correct relationship between the fuel valve and air damper. (Figure F-1)
v. Re-adjust the midfire points for the correct O2 level.
w. If equipped with FGR, adjust the NOx levels at low and midfire rates to be about 10% under the guaranteed levels.
x. Adjust the low gas pressure switch to be 10% below the lowest expected gas pressure.
• With a guage or manometer at the same location as the low gas pressure switch, modulate the burner to determine the firing rate with the lowest gas pressure.
• At the lowest gas pressure,adjust the low gas pressure setting up until the switch breaks and causes the burner to shutdown.
• From the scale reading of the switch,adjust the setting to a pressure that is 10% lower than the shutdown pressure. For example, if the switch opened at 10 inches as indicated on the low gas pressure switch, the switch should be adjusted to a reading of 9 inches.
• Remove the gauge or manometer and plug the opening.
• Cycle the burner on and off to determine if the limit works properly.
• If the limit causes nuisance shutdowns because of small pressure drops during startup, reduce the pressure setting an additional 5%.
y. Adjust the high gas pressure switch to be 10% above the highest expected gas pressure.
• With a gauge or manometer at the same location as the high gas pressure switch, modulate the burner to determine the firing rate with the highest gas pressure.
• At the highest gas pressure,adjust the high gas pressure setting down until the switch opens and causes the burner to shutdown.
• From the scale reading of the switch,adjust the setting to a pressure that is 10% higher then the shutdown pressure. For example, if the switch opened at 10 inches as indicated on the high gas pressure switch, the switch should be adjusted to a reading of 11 inches.
• Remove the gauge or manometer and plug the opening.
• Cycle the burner on and off to determine if the limit works properly.
• If the limit causes nuisance shutdowns because of small pressure changes during startup, increase the pressure setting an additional 5%.
z. The burner should be operating at low fire to adjust the air proving switch. Turn the adjusting screw cw (in) until the burner trips out (shutdown caused by the air flow switch). Turn the adjustment screw ccw (out) 1 1/2 turns from the point of shutdown. Check the operation at higher rates.

10. Pressure Atomized Oil Setup

The pressure atomized oil system has a limited range of adjustment for low and high fire, dictated by the operation of the oil nozzle. The combustion air and FGR must be adjusted to match these rates.

If the burner is equipped with FGR, and is a linkage system, the type of FGR control must be determined prior to starting. If this is a dual fuel burner, the FGR rate is determined by the NOx performance on gas. A 60 ppm burner will operate with the same FGR rate on gas and oil. A 30 ppm unit will use the limiting potentiometer to slightly reduce the FGR rate on oil firing. For Oil only combustion, the NOx level will be given on the burner detail sheet, and should be used to set the FGR control valve.
a. Place the burner switch in the “OFF” position.
b. Place the “Auto-Manual” switch in the manual position. If this is a combination fuel burner, make sure the fuel selector switch is on “OIL”.
c. Place the manual flame control potentiometer in the

min (low fire) position.
d. Turn the electrical power for the burner, boiler and related components on.
e. Verify that the oil metering valve is nearly opened (the valve will be closed at high fire).
f. Turn the burner switch on. This will start the blower motor and initiate the purge cycle.
g. When the prepurge sequence is complete and the low fire start switch is made, the pilot valve will open and the pilot flame should be visible through the burner sight port.
h. When the pilot flame is established, the flame safeguard will energize the main oil valves (indicated with the Fuel Valve Light), and the burner should ignite at low fire. This operation of the main fuel valves must be visually checked by observing the valve stem moving up with a motorized valve or hearing the clicking noise from a solenoid valve.
NOTE: If the burner is not operating as indicated, follow the troubleshooting steps to determine the problem and corrective action.
i. The main flame may not light on the first attempt, because it must fill the oil lines before providing oil to the nozzle. Press the reset button on the flame safeguard to restart the burner.

WARNING
DO NOT ATTEMPT TO START THE BURNER WHEN EXCESS OIL HAS ACCUMULATED, WHEN THE UNIT IS FULL OF VAPOR, OR WHEN THE COMBUSTION CHAMBER IS HOT.

j. After a few seconds, the combustion analyzer should have an accurate reading of the O2 in the stack. The O2 level should be between 4% and 8%, and the nozzle oil pressure should be between 50 and 70 PSIG. Do not attempt to fine tune combustion until the high fire has been set.
If the burner is equipped with FGR, the FGR control valve should be set for the approximate NOx level required.
1. Turning the cam screw in will add fuel, making it richer and reducing the O2 level.
2. Turning the cam screw out will reduce the fuel input, increasing the O2 level.
3. The air damper should be positioned for the correct low fire settings.
k. Operate the burner until the boiler is warmed up, and near the operating pressure or temperature.
l. Increase the firing rate, using the manual potentiometer, while monitoring and adjusting the O2 level. Adjust the cam as needed to reach the high fire input.
If the burner is equipped with FGR, adjust the FGR control valve as required to maintain the NOx level.
m. At high fire (end of the modulating motor travel), adjust the high fire input (open or close the fuel valve) to match the maximum input listed on the rating label. The fuel metering valve should be nearly closed (or closed) at this point and the nozzle pressure should be about 150 PSIG (return line).
n. If equipped with FGR, adjust the NOx level to be about 10% below any guaranteed NOx performance or if performance guarantee exists adjust the FGR to provide some added turbulence but not high enough to impact flame stability. A balance of the FGR control valve and air damper are required to obtain the final result, as each can impact the other. If this is a 30 ppm system, the FGR limiting pot should be adjusted to reduce the FGR rate for stable combustion, with the FGR control valve set when firing gas. If this is a 60 ppm system, no adjustment is necessary.
o. Modulate the burner to low fire, adjusting the O2 level as the burner modulates.
p. Adjust the low fire input, using the fuel cam and air damper adjustments. If the burner is equipped with FGR, adjust the NOx level according to the type of system (limiting potentiometer or matching gas).
q. Re-adjust the midfire points for the correct O2 levels. The linkage may need to be readjusted to obtain the correct relationship between the fuel valve and air damper. (Figure F-1)
r. If equipped with FGR, adjust the NOx levels at low and midfire rates to be about 10% under the guaranteed levels or as required for the gas firing.
s. The burner should be operating at low fire to adjust the air proving switch. Turn the adjusting screw cw (in) until the burner trips out (shutdown caused by the air flow switch). Turn the adjustment screw ccw (out) 1 ½ turns from the point of shutdown. Check the operation at higher rates.
t. Adjust the oil pressure switch to trip and shutdown the burner at a pressure that is 10% lower than the supply oil pressure.

11. Air Atomized, #2 oil Setup

The air atomized oil system has the potential for a large turndown range similar to gas and has the potential to be adjusted to different low fire rates. See the burner nameplate for details on actual rates for this burner.
If the burner is equipped with FGR and is a linkage system, the type of FGR control must be determined prior to starting. If this is a dual fuel burner, the FGR rate is determined by the NOx performance on gas. A 60 ppm burner will operate with the same FGR rate on gas and oil. A 30 ppm unit will use the limiting potentiometer to slightly reduce the FGR rate on oil firing. For Oil only combustion, the NOx level will be given on the burner detail sheet, and should be used to set the FGR control valve.
a. Place the burner switch in the “OFF” position.
b. Place the “Auto-Manual” switch in the manual position. If this is a combination fuel burner, make sure the fuel selector switch is on “OIL”.
c. Place the manual flame control potentiometer in the min (low fire) position.
d. Turn the electrical power for the burner, boiler and related components on.
e. Verify that the oil metering valve is at the nearly closed position.
f. Turn the burner switch on. This will start the blower motor and initiate the purge cycle.
g. When the prepurge sequence is complete and the low fire start switch is made, the pilot valve will open and the pilot flame should be visible through the burner sight port.
h. When the pilot flame is established, the flame safeguard

will energize the main oil valves (indicated with the Fuel Valve Light), and the burner should ignite at low fire. This operation of the main fuel valves must be visually checked by observing the valve stem moving up with a motorized valve or hearing the clicking noise from a solenoid valve.

NOTE: If the burner is not operating as indicated, follow the troubleshooting steps to determine the problem and corrective action.

WARNING

DO NOT ATTEMPT TO START THE BURNER WHEN EXCESS OIL HAS ACCUMULATED, WHEN THE UNIT IS FULL OF VAPOR, OR WHEN THE COMBUSTION CHAMBER IS HOT.

i. After a few seconds, the combustion analyzer should have an accurate reading of the O2 in the stack. The O2 level should be between 4% and 8% (see Figure F-3 for O2 rates), and the nozzle oil press should be between 5 and 15 PSIG (see Figure F-4). Do not attempt to fine tune combustion until the high fire input has been set.

If the burner is equipped with FGR, the FGR control valve or limiting potentiometer should be set for the approximate NOx level required.

- Turning the cam screw in will add fuel, making it richer and reducing the O2 level.
- Turning the cam screw out will reduce the fuel input, increasing the O2 level.
- The air damper should be positioned for the correct low fire settings.
- The atomizing air pressure can be adjusted using the air bleed valve.

j. Operate the burner until the boiler is warmed up, and near the operating pressure or temperature.

k. Increase the firing rate, using the manual potentiometer, while monitoring and adjusting the O2 level. Adjust the cam, oil pressure and atomizing air pressure as needed to reach the high fire input.

l. If the burner is equipped with FGR, adjust the FGR control valve or potentiometer as required to maintain the NOx level.

m. At high fire (end of the modulating motor travel), adjust the high fire input to match the maximum input listed on the rating label. Using a flow meter, the fuel input may be measured using the following equation,

Oil GPH =
[Gal end – Gal start] x [3600 sec/hr] /
[measured sec]

Where Gal end = meter gallons at end of test
Gal start = gallons at start of the test
Measured sec = measured time of test
GPH = Gallons of oil per hour

n. If equipped with FGR, adjust the NOx level to be about 10% below any guaranteed NOx performance or if performance guarantee exists adjust the FGR to provide some added turbulence but not high enough to impact flame stability. A balance of the FGR control valve and air damper are required to obtain the final result, as each can impact the other. If this is a 30 ppm system, the FGR limiting pot should be adjusted to reduce the FGR rate for stable combustion, with the FGR control valve set when firing gas. If this is a 60 ppm system, no adjustment is necessary.

o. Modulate the burner to low fire, adjusting the O2 level as the burner modulates.

p. Adjust the low fire input, using the fuel cam and air damper adjustments.

q. If the burner is equipped with FGR, adjust the NOx level according to the type of system (limiting potentiometer or matching gas).

r. Re-adjust the midfire points for the correct O2 levels. The linkage may need to be readjusted to obtain the correct relationship between the fuel valve and air damper. See Figure F-1.

s. If equipped with FGR, adjust the NOx levels at low and midfire rates to be about 10% under the guaranteed levels or as required for the gas firing.

t. The burner should be operating at low fire to adjust the air proving switch. Turn the adjusting screw cw (in) until the burner trips out (shutdown caused by the air flow switch). Turn the adjustment screw ccw (out) 1 ½ turns from the point of shutdown. Check the operation at higher rates.

FIGURE F-4
Typical Atomizing Air Pressure

% Rate	Minimum
10	5 - 15
15	7 - 20
20	10 - 25
30	12 - 30
40	15 - 35
50	20 - 40
100	25 - 60

12. Operating Control Adjustments

The operating controls must be adjusted to properly cycle the burner “ON and OFF” and provide modulation. See Section E-11 for details. The controls should not force the burner into rapid “ON-OFF” cycles, as this will cause premature failure of the motor and operating equipment.

The operating control must be adjusted to provide the “ON” pressure or temperature desired. It must allow the burner to come on and start before the temperature or pressure drops into the modulating range. The “OFF” pressure or temperature must be sufficiently above the “ON” point to allow a reasonable run time.

The modulating control must be adjusted to start modulation at some reasonable point below the “ON” temperature or pressure and provide modulation to high fire at the lowest temperature or pressure.

13. Limit Tests

Once the burner has been started and the operating pressures have been set, the limit switches need to be adjusted so that they will trip if the pressure exceeds the operating value, but will not trip with normal variations. The switch should be checked for proper operation by allowing the pressure to vary below (or above) the recommended level to insure that they provide safe shutdown before the burner operation is affected. In some high pressure or temperature switches, where the temperature or pressure cannot be set high enough to trip the switch, the switch can be checked by lowering the set point to prove that the switch will provide a safe shutdown.

The limit switches would include the air proving switch on the burner. Limits for gas operation could include the high and low gas pressure switches and for oil firing, the high and low oil pressure switches and the atomizing air pressure switch. If in doubt about which limits are on a burner, refer to the wiring diagram that will show each item.

Limit switches need to be checked at regular intervals to ensure they are operating properly. See the maintenance section for details.

14. Pilot Test

Once the burner as been set for the firing rates intended for the burner, the pilot must be checked for proper operation and safety.

The minimum pilot test is done to insure that a pilot which can be seen by the scanner will light the main flame.

a. During a startup sequence, measure the time required to light the main flame after the fuel valves have been energized. This will be used to monitor the test with reduced pilot.

b. Lock the flame safeguard into the pilot position (refer to the manual for the flame safeguard for this setting)

c. Adjust the gas pressure regulator to the pilot for a minimum value while still holding the minimum signal strength for the scanner.

d. Release the flame safeguard from the pilot position and allow it to cycle though the main flame proving sequence.

e. This reduced pilot must reliably light the main flame. Monitor the time from the main fuel valve opening and do not allow the burner to continue if the time is more then an additional two to three seconds from the initial time measured above.

WARNING

THE MINIMUM PILOT TEST REQUIRES CLOSE SUPERVISION OF THE COMBUSTION PROCESS. FAILURE TO CLOSELY MONITOR THE MAIN FLAME TEST TIME COULD RESULT IN DAMAGE, INJURY OR DEATH.

f. Run through two or three cycles.

g. If this is a combination fuel burner, repeat the test on the other fuel.

h. Failures due to reduced scanner signal are also acceptable.

i. If the pilot does not light the main flame under these test conditions, check and adjust the pilot as shown in figure E-1 and E-6.

The pilot must be tested for hot refractory pickup. This test is performed to make sure that the scanner does not see hot refractory that could be mistaken for a flame.

a. After the burner has been operating for some time at high input levels and the refractory in the vessel is hot, the burner should be cycled off while monitoring the scanner signal.

b. The flame signal should drop off quickly as the flame goes out and should be well below the minimum level (indicating a flame) at the end of the the post purge cycle.

c. If the flame signal does not drop out as required, check the location of the pilot and scanner, as shown in Figure E-1. This may also indicate a faulty scanner or amplifier.

15. Burner Shutdown

Normal operation of the burner will allow the operating controls to shut the burner down when the load demand is satisfied. If the burner needs to be shut down for any reason, the “ON-OFF” switch can be used to quickly turn the burner off. This will instantly cause the fuel valves to close and start a post purge cycle to remove any unburned fuel from the vessel.

In an emergency shutdown, all fuel and electrical power should be de-energized or turned off to secure the burner. This would include the main power disconnect, the manual gas shutoff valve at the drop down line and if equipped, the manual oil valve to the nozzle.

It is recommended that the burner be manually driven to low fire before turning the burner off, as this reduces the dynamic and thermal stress. If the burner will remain off for some time, the manual fuel valves, fuel pumps and power supply should be turned off.

CAUTION

ALWAYS KEEP THE FUEL SUPPLY VALVE SHUT OFF WHEN THE BURNER IS SHUT DOWN FOR AN EXTENDED PERIOD OF TIME.

16. Restarting after Extended Shutdown

Extended shutdowns require the same startup process as those outlined above. In addition, the following advanced cleaning must be done,

a. The oil nozzle should be removed and cleaned. Use care in cleaning to preserve the sharp edges of the nozzle, which are required to maintain good atomization.

b. The oil filter and strainer must be removed and cleaned prior to starting.

CAUTION

DO NOT START THE BURNER UNLESS ALL CLEANOUT DOORS ARE SECURED IN PLACE.

G. MAINTENANCE

1. General
2. Physical Inspection
3. Fuel-Air-Ratio
4. Gas Fuel Systems
5. Oil Fuel Systems
6. FGR System
7. Combustion Air Fan
8. Inspection and Maintenance Schedule
9. Combustion Chart

1. General

This burner has been designed to provide many years of trouble free operation. The reliability can be greatly improved with some simple inspection and maintenance programs.

One of the best tools for a good maintenance program is to keep a log on the key parameters of the burner and boiler. These would include operating temperatures, pressures, inspections and preventative maintenance activities. This document can be used to detect any changes in the operating characteristics of the burner, which can be used for preventative maintenance.

The maintenance schedule can be used to help generate this log. There are also many other good references that can be use to help develop your log. Adding check points for other equipment into a common log can help. It is common to integrate the boiler and burner log, so that all components are checked at the same time.

The frequency of inspection given in the folllowing charts is only a guideline. Initial results should be used to adjust the time intervals to be more frequent when problems or potential problems are observed.

2. Physical Inspection

Listening and looking at the burner can detect many problems. For example, leakage can usually be seen early with a small buildup of oil . Valve and linkage problems can usually be detected early on by simply watching the movement and detecting rough uneven changes. The jackshaft, linkage and valve movement should occur smoothly with no rough jerks.

The flame condition can often be a good indicator of the firing head. If the flame does not look correct, there may be a problem with the hardware. The firing head is exposed to the high temperatures of combustion and can have reduced life due to the thermal stress. In particular, the diffuser, oil nozzle, gas spuds, gas manifold, refractory and burner mounting plate should all be inspected.

3. Fuel-Air-Ratio Controls

The fuel-air-ratio controls must be maintained in good operating condition. Over time, these items will wear and may not operate smoothly. Corrective action must be taken.

There are several different types of controls and the corrective action of each could be different. The following general guidelines can be used for initial steps.

Linkage based controls should be inspected for wear. If there is any noticeable play in the linkage rod ends or shaft bearing, they should be replaced. Likewise, any control valves that exhibit sloppy or hard to turn movement should also be replaced.

Fuel cams should have adjusting screws that are held firmly in position and can not move due to normal vibrations. The moving parts must be in good condition with no noticeable wear or play. Worn connections will result in hysteresis and reduced combustion efficiency.

The cam and jackshaft should be visually checked on a frequent or daily basis for obvious problems, including free movement, no loose parts and correct position of components.

On a monthly basis, the linkage and cams should be inspected for wear and loose parts. Annually, the cam and linkage should be operated manually to check the movement of all components and valves. Any worn parts should be replaced immediately.

If the burner will be operating for extended periods on gas, the oil gun should be removed to prevent the oil nozzles from “coking” due to the heat of the gas flame.

4. Gas Fuel System

The safety interlocks must be checked at regular intervals to ensure that they provide the proper safety. See the Inspection and Maintenance Schedule Chart (Figure 8) for frequencies.

The drip leg should be cleaned annually.

Monitoring the outlet gas pressure from the regulator will verify this control is working properly.

5. Oil Fuel System

The oil system has additional components that require regular maintenance, depending on the type of system used.

a. Oil added to air compressor. The air compressor has a visual sight glass showing the oil level. This must be inspected every shift (while operating).

b. Air compressor belt tight and in good condition

c. The oil strainer should be checked and cleaned periodically. A high vacuum reading on the suction side of the pump (over 10”) is a good indication that the strainer needs to be cleaned. Strainers provided by Webster will use a wire mesh basket inside a canister. After turning the pump off (and making sure there is no pressure on

the strainer), unscrew the yoke to gain access to the basket. The canister does not need to be drained. Be careful with the gasket when removing or replacing the cover to insure a good seal. The basket can be lifted out and cleaned with a soft brush and cleaning solution.

d. Vacuum within the 10" limit on suction side of pump (indicates need to clean strainer, as described above). If cleaning the strainer does not resolve this, check the other valves between the tank and gauge for plugged or closed position.

e. Air atomized oil nozzles should be cleaned periodically, depending on the type of operation and the observed need for cleaning. Extended operation at very low rates (less then 15% of capacity) can cause carbon buildup on the outside of the nozzle. This can be cleaned with a rag and cleaning solution. If the fire is showing some deterioration, and the external surfaces are clean, then the nozzles should be removed, disassembled and cleaned using a soft brush and cleaning solution.

f. If the edges of the air atomizing nozzle are not sharp, or the nozzle shows sign of wear and the combustion is deteriorated, the nozzle should be replaced. The nozzle part number is given on the material list of the unit. In general, a single port (center hole) or multiport (multiple hole at the spray angle) nozzle with a spray angle of 70 degrees will work well for light oil.

g. Pressure atomized oil nozzles have a filter feeding the nozzle that can be plugged over time. The filter can be unscrewed from the back cleaned, using a soft brush and cleaning solution. When these nozzles are removed form the nozzle body (see Figure B-19), the plastic seals at the end of the nozzle must be replaced, or the nozzle may not seal correctly. The seal can be slid off of the nozzle and a new one installed. Use extreme care to not put any cuts or nicks in the seal. Once the seal is on, the nozzle can be inserted and screwed into the nozzle body.

h. If a pressure atomized oil nozzle needs to be replaced, it should be a Delevan Veriflow type, using a 60 degree spray angle for 200 – 350 BHP and 80 degrees for 400 BHP.

i. Check safety limits, including pressure and temperature switches

6. FGR Systems

The flue gas is corrosive and requires regular inspection of the equipment to ensure proper and safe operation. The potential for corrosion and frequency of the inspection can vary greatly based on the application. Applications with condensation will have more corrosion and will need more maintenance. Frequent cycling, cold startups, cool operating temperatures, cool air temperatures and outdoor installations are good examples of where high levels of condensation can occur.

Areas to inspect for corrosion:

- FGR control valves (s)
- FGR Duct
- Air inlet louver box
- Fan and fan housing
- Burner housing
- Firing head and blast tube

Other checks:

a. The condensation traps must work properly and be installed to capture all of the condensation. If condensation passes through to the burner windbox, a condensate drain should be added to the bottom of the windbox.

b. Linkage and valve movement must operate freely and smoothly.

c. If the FGR valve is modulated partly open (oil firing on dual fuel burner) check position of FGR valve.

d. NOx emissions level.

e. Other general items like refractory.

f. Stack temperature of boiler – high temperatures will increase NOx levels.

g. Operation of safety equipment.

h. Time delay on FGR on-off valve (if equipped).

7. Combustion air Fan

If the fan and motor are ever removed, the following should be observed in re-assembly.

a. There should be about ¼" overlap of inlet cone and fan.

b. Never re-use the fan to motor shaft set screws, always use new screws of the same size and style to maintain balance and fan retention.

c. When tightening the fan hub set screws, rotate the fan to place the screws on the bottom. This way the screw is not lifting the fan.

d. The motor shaft and fan hub must be clean and free of burrs.

e. Torque the fan hub set screws to:

- o 250 in-lbs for 3/8" set screws
- o 600 in-lbs for 1/2" set screws
- o 97 ft-lbs for 5/8" set screws

8 - Inspection and Maintenance Schedule

Frequency								Performed By	
Daily	Weekly	Monthly	Seasonal	Annual	Annual As Required	Component / Item	Recommended Action or Test	Boiler Operator	Trained Burner Technician
X						Burner Flame	Visual inspection of burner flame.	X	
X						Jackshaft and Linkage	Visual inspection for smooth and free travel.	X	
X						Air Damper	Visual inspection for smooth and free travel.	X	
X						Fuel Metering Valves	Visual inspection for smooth and free travel.	X	
X						Draft Controls (Stack)	Visual inspection for smooth and free travel.	X	
X						Gas Fuel Pressure	Record in log book, compare trends.	X	
X						Oil Pressure	Record in log book, compare trends.	X	
X						Atomizing Air Pressure	Record in log book, compare trends.	X	
X						Pilot	Visually inspect pilot flame, check and record flame signal strength if metered.	X	
	X					Flame SafeGuard - Pilot Test	Close manual fuel valve on pilot during cycle and check for safety shutdown, recording time.	X	
	X					Flame SafeGuard - Main Flame	Close manual fuel valve on pilot during cycle and check for safety shutdown, recording time.	X	
		X				Flame SafeGuard	Check flame safeguard components, including scanner.		X
				X		Flame SafeGuard	Replace flame safeguard components in accordance with manufacturers instructions.		X
				X	X	Pilot Turndown Test	Conduct pilot turndown test annually or after any component change.		X
				X	X	Hot Refractory Test	Conduct hot refractory hold in test. This test is required annually or after any component change.		X
		X				Oil Pressure and Temperature Interlocks	Check oil pressure and temperature switch for smooth operation and correct action.		X
		X				Atomizing Air Pressure	Check air atomizing pressure interlock switch for smooth operation and correct action.	X	
		X				Interlock Controls	Check other interlocks that may be used on the burner for smooth operation and correct action.		X
			X			Firing Rate Control	Check firing rate control and verify settings.		X
			X			Combustion Tunning	Conduct a combustion test, verify setting and NOx emission levels.		X
	X					Pilot anf Main Fuel Valves	Make visual and manual check for proper sequencing of valves.		X
				X		Pilot and Main Fuel Valves	Check all coils, diaphrams, interlock switch & other parts of all safety shutoff valves.		X
				X		Pilot and Main Fuel Valves	Perform leak tests on all safety shutdown control valves.		X
				X		Low Pressure Air Switch	Test low air pressure switch for proper operation and adjustment.		X
				X		Mod Damper Switch	Check damper low fire proving switch per manufacturers instructions.		X
				X		Linkage and Fuel Cams	Check linkage and cams for wear and replace any items with wear indication or stress cracks.		X
X						FGR Control Valve	Visual inspection for smooth and free travel.	X	
			X			FGR Control Valve	Clean and lubricate FGR control valve.	X	
	X					FGR Shutoff Valve	Visually inspect for smooth and complete travel.	X	
			X			FGR Shutoff Valve	Clean and lubrcate FGR shutoff valve	X	
X						FGR Condensate Drain	Open FGR condensate drains, remove all condensate.	X	
					X	FGR Shutoff Valve Switch	Check operation of shutoff FGR valve for full rotation and position proving switch.		X
					X	FGR Duct	Inspect and clean FGR duct.	X	
					X	Combustion Air Fan	Clean combustion air fan and housing		X
X	X					Burner Components	Visually check the burner components for signs of cracks, deformation, slippage or other unusual indication.		X
		X				Burner Mounting	Check burner mounting clamps and brackets for tightness.	X	
		X				Refractory and Seals	Check burner refractory for cracks or signs of leakage.	X	
		X				Oil Nozzle	Check and clean oil nozzle.	X	
X						Air Compressor	Check air compressor for lubrication oil and air filter.	X	
				X		Air Compressor	Check air compressor relief valve operation.		X

9 - Combustion Chart

This graph shows the relationship between excess air, %Oxygen and %CO2, which is typically obtained from a flue gas analyzer. The values are based on a dry reading, where the flue gas is extracted and cooled before the analysis if done.

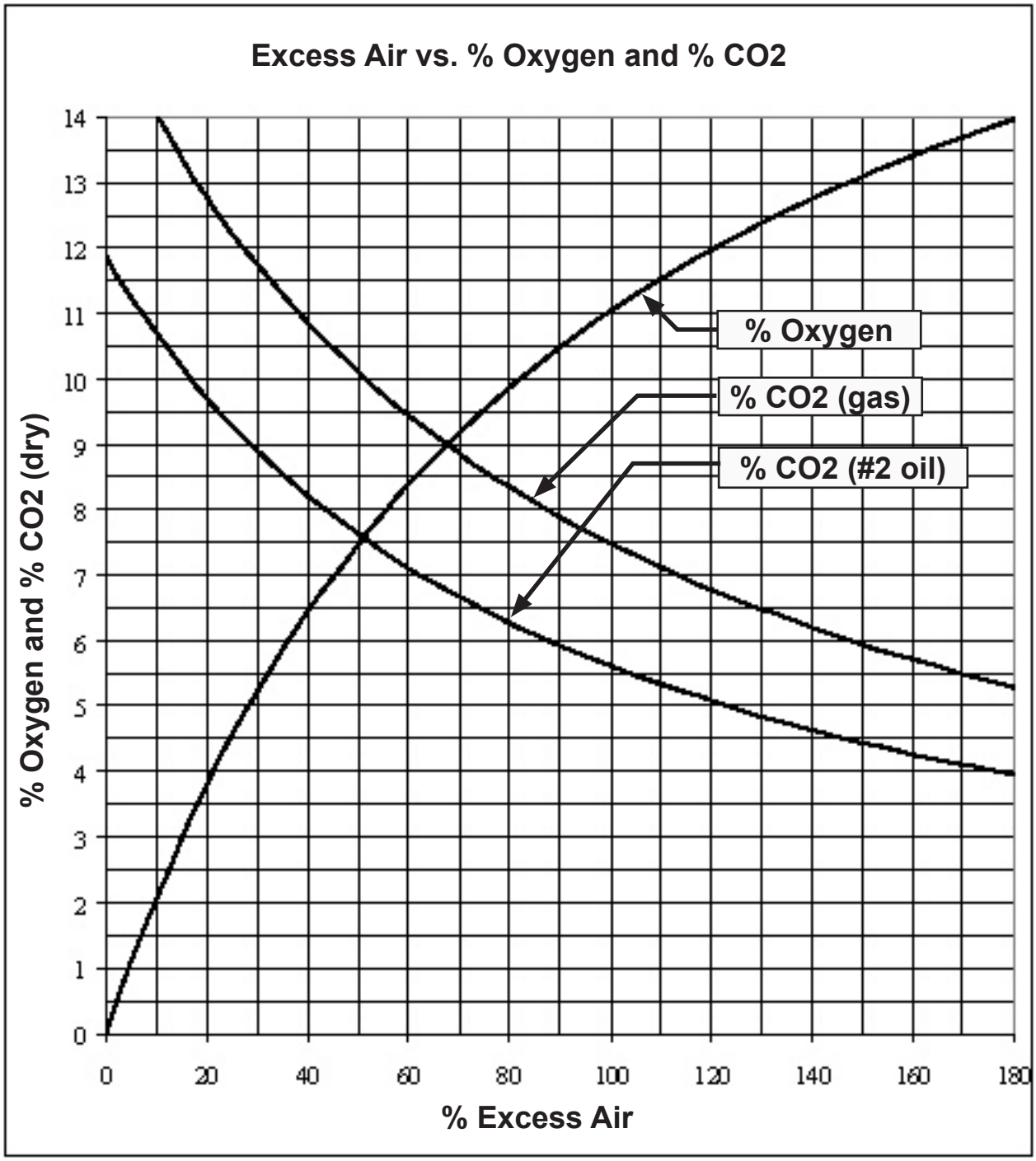

NOTES

H. Troubleshooting

No.	System	Cause	Correction
1	No Ignition	Electrode is grounded. Porcelain is cracked.	Replace
	(lack of spark)	Improperly positioned electrode	Recheck dimensions
		Loose ignition wire connection	Reconnect or tighten
		Defective ignition transformer	Check transformer, replace
2	No Ignition	Lack of fuel, no gas pressure, closed fuel valve	Check fuel supply and valves
	(spark, no flame)	No voltage to pilot solenoid	Check electrical connections
		Defective pilot solenoid valve	Replace
		Incorrect location of pilot	Check location of pilot
		Improper raw gas tube position	Check location of raw gas tube
		Improperly positioned electrodes	Recheck dimensions
		Too much combustion air flow	Check air damper position
3	Pilot not detected	Scanner tube not positioned correctly	Check location of scanner tube
	(flame present)	Scanner tube dirty	Clean scanner tube
		Scanner or amplifier faulty	Replace
		Pilot improperly positioned	Check pilot position
		Incorrect gas pressure to pilot	Readjust pressure
		Combustion air flow rate too high	Readjust damper
4	No main gas flame	Weak scanner signal	Clean scanner lens and tube
	(pilot OK)	Damper or fuel control valve setting incorrect	Readjust
		Fuel valve(s) not opening	Check wiring to valves
5	No main oil flame	Weak scanner signal	Clean scanner lense and tube
	(pilot OK)	Damper or fuel control valve setting incorrect	Readjust
		Fuel valve(s) not opening	Check wiring to valves
		Oil nozzle or line obstructed	Check nozzle and lines, clean
		No atomizing air pressure	Check compressor wiring
		Compressor pressure too low or high	Readjust
		Burner not level, oil is draining into vessel	Check level, adjust as required.
6	Burner stays at low fire	Manual pot in low fire position (low fire hold)	Readjust to high fire position
		Manual-auto switch in wrong position	Change position of switch
		Modulating Control	Check wiring or replace
		Loose linkage	Readjust and tighten
		Binding linkage or valve	Readjust or replace
7	Burner shuts down	Loose electrical connection	Check and tighten connections
	during operation	Loss of fuel supply	Replenish fuel supply
		Limit switch breaks (opens)	Readjust limit switch
8	Burner does not start	Main disconnect switch is open	Close switch
		Loose electrical connection	Check electrical connections
		Operating controls are tripped	Check and reset operating limits
		High or low fuel pressure	Check fuel supply - reset switches
9	High CO at low fire	Improper excess air level	Readjust excess air
	(firing gas)	Input too low for burner components	Check input, compare to rating label

No.	System	Cause	Correction
	High CO at low fire (con't)	High stack draft (especially at low fire)	Stabalize draft
	(firing gas)	Poor air flow distribution (off center flame)	Adjust air straightener blade
		Diffuser not in optimum position	Adjust diffuser position in or out
		Fluxuating gas pressure (regulator not holding pressure)	Check regulator pressure, sensing line and supply pressure: sized properly
10	Gas combustion noise	Input too low for burner components	Check input, compare to rating label
	(rumbling)	Improper excess air	Readjust excess air
		Fluxuating gas pressure (regulator not holding pressure)	Check regulator pressure and supply
		High stack draft (especially at low fire)	Stabalize draft
		Diffuser not in optimum position	Adjust diffuser position in or out
		Poor air flow distribution (off center flame)	Adjust air straightner blade
11	Oil combustion smoking	Oil nozzle dirty or plugged	Clean oil nozzle
		Improper excess air	Readjust excess air
		Input too low for burner components	Check input, compare to rating label
		High stack draft (especially at low fire)	Stabalize draft
		Incorrect nozzle position	Adjust the nozzle to diffuser position
		Fluxuating oil pressures (regulator not holding)	Check regulator pressure and oil supply
		Poor air flow distribution (off center flame)	Adjust air straightner blade
		Too much FGR (if equipped)	Reduce FGR rate
12	Fuel-Air-Ratios are	Linkage flexing	Realign linkage, straighten rods
	not consistent	Linkage slip	Check linkage and tighten all joints
		Fuel cam screws have moved	Replace fuel cam
		Fuel line plugged	Check and clean lines, stariners & filters
		Fuel supply pressure changing	Check and/or replace pressure regulator
		Combustion air temperature changed	Retune burner
		Draft condition changed	Check draft and outlet damper
		Plugged or leaky FGR line	Clean / repair
		Gas control valve - low fire stop not set	Adjust low fire stop
13	Fuel-Air-Ratios have changed	Linkage wear	Check linkage and tighten all joints
	over time	Fuel cam screws have moved	Replace fuel cam
		Air damper seal worn	Replace air damper seals
		Fuel lines plugged	Check and clean lines, strainers & filters
		Fuel control valve worn	Replace fuel control valve
		Gas orifices or gas manifold plugged	Clean and/or replace
		Combustion air temperature changed	Retune burner
		Draft condition changed	Check draft and outlet damper
		Vessel plugged	Clean vessel
		Plugged or leaky FGR valve	Clean / repair
14	Cannot obtain capacity on	Wrong spring range in regulator	Install higher spring range
	gas	Too many elbows before control valve	Rework piping to reduce elbows
		Gas line too small, high pressure drop	Use larger pipe size
		Supply pressure lower then stated	Increase supply pressure
		Supply pressure drops too low at high fire	Use larger gas line sizes / orifice in service regulator
		Regulator too small for flow and pressure	Change regulator
15	Cannot obtain rated input on	Oil nozzles plugged	Replace nozzles
	oil firing (pressure atomized)	By-pass seal on nozzle leaking	Replace nozzles

No.	System	Cause	Correction
	Cannot obtain rated input on	Oil pressure too low	Increase oil pressure
	oil firing (pres. atom.) (con't)	Flow valve set too low (should be closed at high fire)	Adjust oil control valve
		Oil flow valve set too low (should be closed at high fire)	Adjust oil control valve
16	Cannot obtain rated input on	Oil nozzles plugged	Replace nozzles
	oil firing (air atomized)	Air pressure too low	Replace nozzles
		Oil pressure too low	Increase oil pressure
		Flow valve set too low	Adjust oil control valve
17	Cannot obtain NOx levels on	Inlet tube in wrong position	Adjust inlet tube to center of fan inlet
	gas	" "	Taper FGR valve to be full open
		FGR valve not full open	Adjust FGR valve to full open
		FGR valve full of condensate	Clean duct and add drains
		FGR duct not directed to flue stream	Add angle cut in center of stack
		FGR line too small	Check sizing, use fittings with less drop
		Operating on propane, not natural gas	Resize FGR for propane operation
		Shutoff valve is not full open	Check FGR shutoff valve position

NOTES

Webster Engineering & Manufacturing Co., L.L.C.
619 Industrial Road, Winfield, KS 67156
www.webster-engineering.com